THIS DRAWING IS UNPUBLISHED. RELEASED FOR PUBLICATION 20
© COPYRIGHT 20 BY TYCO ELECTRONICS CORPORATION. ALL RIGHTS RESERVED.

PART NUMBER	REV	FIRST USED	POWER UNIT	FEED TYPE
1855064-1	A	122500-1	LEADMAKER & BENCH MODEL G	POST FEED
1855064-2	A	565435-5	BENCH MODEL K	POST FEED
7-1855064-7	A	-	SPARE PARTS	-

1. RECOMMENDED SPARE PARTS
2. GREASE LIGHTLY
3. GUARD MUST BE IN PLACE WHEN OPERATING APPLICATOR IN A BENCH MACHINE

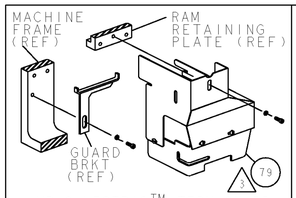

AMP-O-LECTRIC™ TERM GUARD

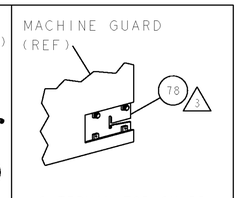

G TERMINATOR GUARD

TERMINAL NAME: RECEPTACLE, FASTON, .250 SERIES					
60295	-	AMP TERMINAL - AMP CRIMP SPECS			
280095	-				
-	-	REF SETTING	CRIMP HEIGHT		WIRE SIZE
-	-	A9	.048±.002[1.22±0.05mm]		18 AWG
-	-	B6	.044±.002[1.12±0.05mm]		20 AWG
-	-	C1	.042±.002[1.07±0.05mm]		22 AWG
-	-	-	-		-
-	-	CRIMP	SIZE	TYPE	RANGE
-	-				
-	-	WIRE	.090 [2.29mm]	F	22-18 AWG
-	-	INSUL	.140 [3.56mm]	O	Ø.085-.120
WIRE STRIP LENGTH .186 -.201	TERM APPL SPEC 114-2025		FEED .840	APPL INSTRUCTIONS 408-8039	SET UP GAGE 458638-1

LOC	DIST
A	66

REVISIONS

P	LTR	DESCRIPTION	DATE	DWN	APVD
	A	RELEASED	18APR2006	ROW	GB

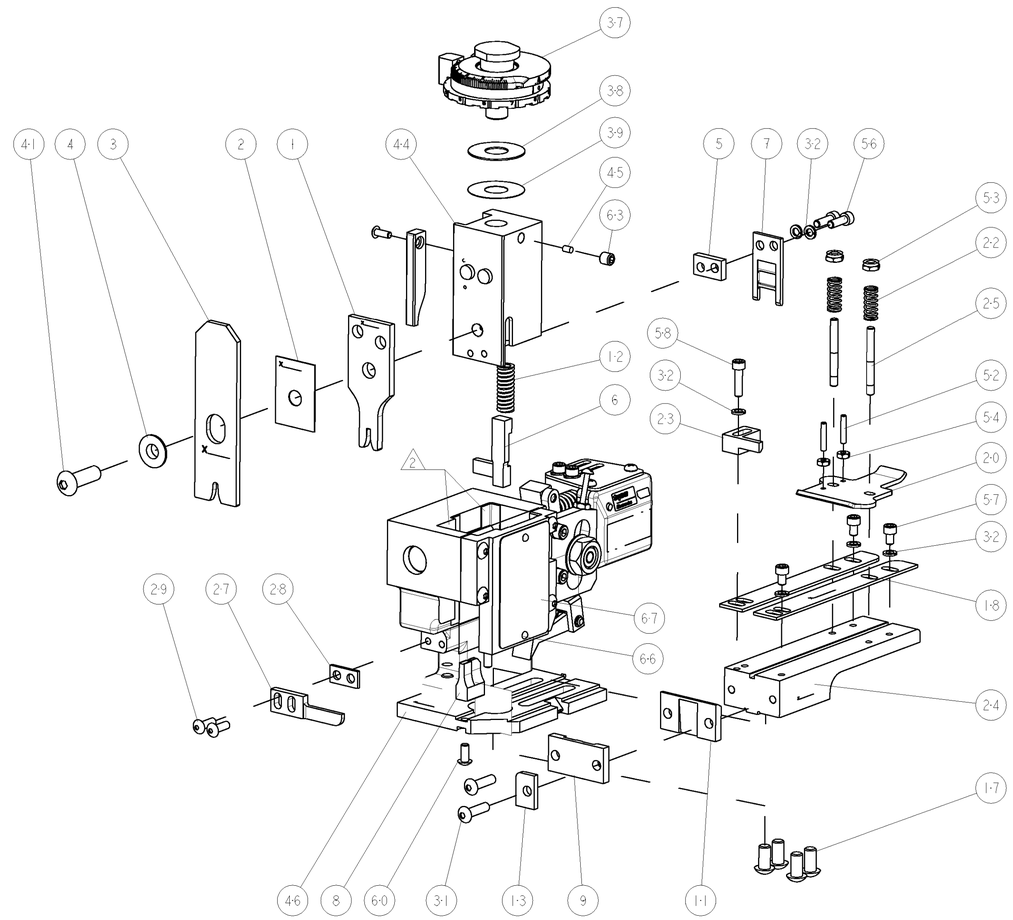

3	-	REF	-	..	455745-1	GUARD WINDOW	79
3	-	-	REF	..	679532-1	INSERT, GUARD	78
	-	1	1	-	217238-1	GENERAL INSTRUCTION PKG	72
	-	1	1	-	4088039	EF APPL INST 408-8039	71
	-	1	1	-	461264-5	PLATE, IDENTIFICATION	67
	-	2	2	-	21017-2	SCREW, DRIVE	66
	-	1	1	-	21009-2	SCR, SET, SELF LOCKING 1/4-20 X .250	63
	-	1	1	-	22733-8	SCR, BHSC, SELF-LOCKING, 8-32 X .375	60
	-	2	2	-	2-21000-8	SCR, SKT HD CAP 8-32 X .625	58
	-	3	3	-	2-21000-5	SCR, SKT HD CAP 8-32 X .250	57
	-	2	2	-	2-21000-7	SCR, SKT HD CAP 8-32 X .500	56
	-	2	2	-	21018-4	NUT, HEX, REG 4-40	54
	-	2	2	-	21022-2	NUT, LOCK, HEX, TORQUE, 8-32	53
	-	2	2	-	2-21006-6	SCR, SET, CUP POINT 4-40 X .625	52
	-	1	1	-	1-21002-7	SCR, BTN SKT HD CAP 6-32 X .375	49
	-	1	-	..	690501-3	CAM, POST FEED, 1 1/8	48
	-	-	1	-	690501-4	CAM, POST-FEED 1 5/8	47
	-	1	1	-	458980-1	SUB ASSY, APPLICATOR FRAME	46
	-	1	1	-	690191-1	PLUG,NYLON	45
	-	1	1	-	455674-1	RAM	44
	-	1	1	-	7-21002-9	SCR, BTN SKT HD CAP 5/16-24 X 1.00	41
	-	1	1	-	690125-1	SHIM SUB-ASSY	39
	-	1	1	-	469367-8	SHIM	38
	-	1	1	-	879103-3	FINE ADJUST HEAD SUBASSY	37
	-	7	7	-	21024-4	WASHER, SPRG LOCK, REG NO 8	32
	-	2	2	-	2-21002-9	SCR, BTN SKT HD CAP 10-32 X .750	31
	-	2	2	-	2-21002-2	SCR, BTN SKT HD CAP 8-32 X .500	29
	-	1	1	-	3-690451-2	SPACER, STRIPPER	28
	-	1	1	-	240639-1	STRIPPER (MACHINING)	27
	-	2	2	-	22354-8	STUD, THREADED	25
	-	1	1	-	458803-2	PLATE, STRIP GUIDE, SLOTTED	24
	-	1	1	-	240825-3	PLATE, STRIP HOLD DOWN	23
	-	2	2	-	4-22281-1	SPRING, DRAG	22
	-	1	1	-	454177-1	DRAG	20
	-	2	2	-	454204-1	GUIDE, LOWER STRIP	18
	-	4	4	-	3-21002-3	SCR, BTN SKT HD CAP 1/4-20 X .500	17
	-	1	1	-	690481-7	SPACER, HOLD DOWN	13
	-	1	1	-	23846-1	SPRING, DIE	12
1	-	1	1	-	240833-2	PLATE, REAR SHEAR	11
1	-	1	1	-	690482-3	PLATE, FRONT SHEAR	9
1	1	1	1	-	6-240693-2	ANVIL, COMBINATION	8
1	-	1	1	-	690474-3	BLADE, SLUG	7
	-	1	1	-	2-455892-7	HOLD DOWN, TERMINAL	6
	-	1	1	-	2-240641-0	SPACER	5
	-	1	1	-	238009-1	BLOCK, FL CRIMPER SPACER	4
1	1	1	1	-	3-456135-8	CRIMPER, INSULATION O PREMIUM	3
	-	1	1	-	455888-4	SPACER, CRIMPER	2
1	1	1	1	-	1-456406-2	CRIMPER, WIRE PREMIUM	1
	-77	-2	-1	U/M	PART NO	DESCRIPTION	ITEM NO

POST-FEED 1 5/8 STROKE

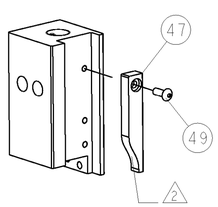

LEADMAKER & G TERMINATOR BENCH MACHINE

POST-FEED 1 1/8 STROKE

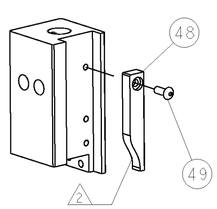

K TERMINATOR BENCH MACHINE

* WARNING:

ON INSTALLATION, SET WIRE DISC TO LARGEST WIRE SIZE SETTING. USE OF SETTINGS BELOW MIN REQUIRED CRIMP HEIGHT SETTING WILL CAUSE DAMAGE TO CRIMP TOOLING.

THIS DRAWING IS A CONTROLLED DOCUMENT OF TYCO ELECTRONICS CORPORATION. IT IS SUBJECT TO CHANGE. ANY PRINTED COPY OF THIS DRAWING OR DOCUMENT SHOULD BE CONTACTED FOR THE LATEST REVISION.

DWN R.O.WILSON	24MAR2006	tyco Electronics — Tyco Electronics, Harrisburg, PA 17105-3608
CHK R.O.WILSON	24MAR2006	
APVD T.ELBIN	29MAR2006	NAME: END FEED HDM APPLICATOR WITH FINE ADJUST
DIMENSIONS: INCHES	TOLERANCES UNLESS OTHERWISE SPECIFIED: 0 PLC ±-; 1 PLC ±0.1; 2 PLC ±0.01; 3 PLC ±0.001; 4 PLC ±0.0001; ANGLES ±-	PRODUCT SPEC -
MATERIAL - -	FINISH - -	APPLICATION SPEC -
		WEIGHT -
SIZE A1	CAGE CODE 00779	DRAWING NO C-1855064
RESTRICTED TO -		
CUSTOMER DRAWING	SCALE 3:5	SHEET 1 OF 1 REV A

CUSTOMER VIEWABLE ASSEMBLY

AMP 4805 REV 31MAR2000

Pro/ENGINEER DRAWING

Mouser Electronics

Authorized Distributor

Click to View Pricing, Inventory, Delivery & Lifecycle Information:

TE Connectivity:

1855064-1