THIS DRAWING IS UNPUBLISHED. RELEASED FOR PUBLICATION -
© COPYRIGHT- - ALL RIGHTS RESERVED.

LOC	DIST
A1	–

REVISIONS

P	LTR	DESCRIPTION	DATE	DWN	APVD
	G2	REVISED PER ECO-11-005150	31MAR2011	RK	HMR
	G3	ECR-16-016696	31AUG2017	GR	MKO

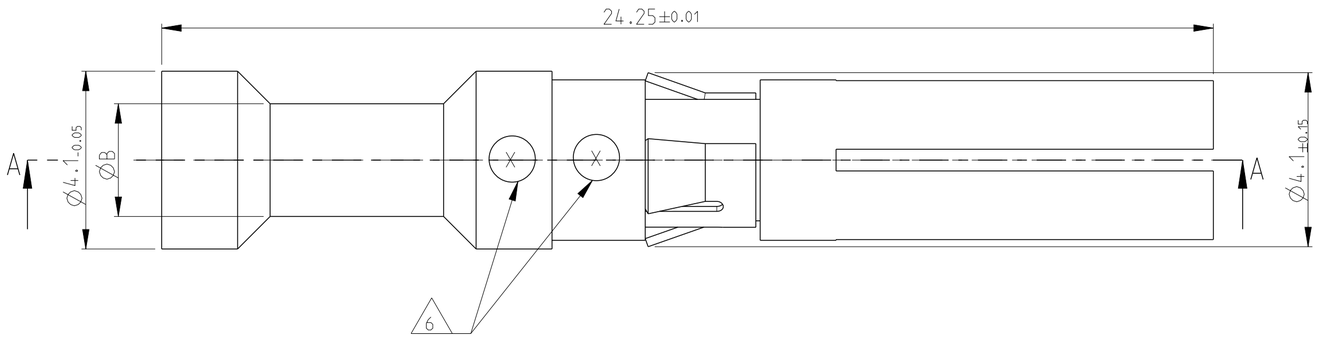

NOTES

1. MATERIAL SEE TABLE
2. SURFACE SEE TABLE
3. ASSEMBLY WEIGHT SEE TABLE
4. PACKAGING: 50 PIECES IN POLYBAG
5. PACKAGING: 500 PIECES IN POLYBAG & CARTON
6. CROSS-SECTION MARKING
7. NO VENTILATION HOLE REQUIRED AT CROSS SECTION >4.0mm²
8. SUITABLE PIN CONTACT: PN 1105300
9. SUITABLE INSERTS: SERIES HVT
10. SUITABLE CRIMP TOOL: PN 1-1105851-8
11. SUITABLE INSERTION TOOL: PN 0-1102855-6
12. SUITABLE EXTRACTION TOOL: PN 0-1102855-3
13. STANDARDS: DIN EN 61984, DIN EN 60664-1

SECTION A-A

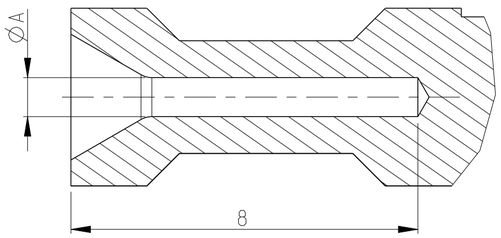

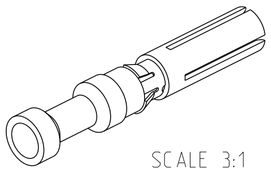

SCALE 3:1

4	5	0.00142	0.00144	0.00148	0.00145	0.00149	0.00150	~~0.00144~~ OBSOLETE	0.00148	0.00133	0.00142	0.00144	0.00148	0.00145	0.00149	0.00150	ASSEMBLY WEIGHT IN (Kg) 3						
5-2	5-9	1															Socket Contact 4.0 mm²	CuZn39Pb3 F50	GOLD PLATING	2.85	3.9	6	1
4-2	4-9		1														Socket Contact 2.5 mm²			2.2	3.2	5	
3-2	3-9			1													Socket Contact 1.5 mm²			1.8	3.0	4	
2-2	2-9				1												Socket Contact 0.75-1.0 mm²			1.45	2.6	3	
1-2	1-9					1											Socket Contact 0.5 mm²			1.1	2.6	2	
6-2	6-9						1										Socket Contact 0.13-0.4 mm²			0.9	2.6	1	
8-2	8-8							1									Socket Contact 14 AWG		SILVER PLATING	2.0	3.2	8	
9-1	9-8								1								Socket Contact 12 AWG			2.55	3.6	9	
7-2	7-8									1							Socket Contact 10 AWG			3.2	4.1	7	
5-1	5-8										1						Socket Contact 4.0 mm²			2.85	3.9	6	
4-1	4-8											1					Socket Contact 2.5 mm²			2.2	3.2	5	
3-1	3-8												1				Socket Contact 1.5 mm²			1.8	3.0	4	
2-1	2-8													1			Socket Contact 0.75-1.0 mm²			1.45	2.6	3	
1-1	1-8														1		Socket Contact 0.5 mm²			1.1	2.6	2	
6-1	6-8															1	Socket Contact 0.13-0.4 mm²			0.9	2.6	1	
		HVT-C-Bu.Au.4.0 mm²	HVT-C-Bu.Au.2.5 mm²	HVT-C-Bu.Au.1.5 mm²	HVT-C-Bu.Au.0.75-1.0 mm²	HVT-C-Bu.Au.0.5 mm²	HVT-C-Bu.Au.0.13-0.4 mm²	~~HVT-C-Bu.Ag.AWG.14~~	HVT-C-Bu.Ag.AWG.12	HVT-C-Bu.Ag.AWG.10	HVT-C-Bu.Ag.4.0 mm²	HVT-C-Bu.Ag.2.5 mm²	HVT-C-Bu.Ag.1.5 mm²	HVT-C-Bu.Ag.0.75-1.0 mm²	HVT-C-Bu.Ag.0.5 mm²	HVT-C-Bu.Ag.0.13-0.4 mm²	ORDERING TEXT						

4	5	DESCRIPTION	MATERIAL 1	SURFACE 2	ØA	ØB	CROSS SECTION MARKING 6	ITEM NO

THIS DRAWING IS A CONTROLLED DOCUMENT.

DIMENSIONS: mm

TOLERANCES UNLESS OTHERWISE SPECIFIED: ISO 8015, DIN ISO 2768 mH-E, DIN 16901-120
0 PLC ±
1 PLC ±
2 PLC ±
3 PLC ±
4 PLC ±
ANGLES ±

MATERIAL 1

FINISH 2

DWN	G.WROBLEWSKI	04.SEP.2007
CHK	T.SCHNURPFEIL	04.SEP.2007
APVD	T.SCHNURPFEIL	04.SEP.2007

PRODUCT SPEC –

APPLICATION SPEC –

WEIGHT –

TE Connectivity

NAME SOCKET CONTACT SERIES HVT –

SIZE	CAGE CODE	DRAWING NO	RESTRICTED TO
A2	00779	C-1105301	–

CUSTOMER DRAWING | SCALE 10:1 | SHEET 1 OF 1 | REV G3

Mouser Electronics

Authorized Distributor

Click to View Pricing, Inventory, Delivery & Lifecycle Information:

TE Connectivity:

5-1105301-2