Customer Information Sheet

DRAWING No.: M20-995XXXX	IF IN DOUBT - ASK	©	NOT TO SCALE	THIRD ANGLE PROJECTION	ALL DIMENSIONS IN mm

NOTES:
1. RECOMMENDED PCB MOUNTING HOLE SIZE = Ø1.02±0.05mm.
2. ALL TOLERANCES ARE ±0.25mm UNLESS OTHERWISE STATED.
3. FOR COMPLETE SPECIFICATION, SEE COMPONENT SPECIFICATION C001XX (LATEST ISSUE).

SPECIFICATION:
MATERIAL:
MOULDING = PA6T UL94V-0, BLACK
PINS = BRASS
FINISH:
PINS (OVER NICKEL):
45 = GOLD
46 = 100% TIN
ELECTRICAL:
CURRENT RATING = 3A MAX
CONTACT RESISTANCE = 20mΩ MAX
INSULATION RESISTANCE = 1,000MΩ MIN
DIELECTRIC STRENGTH = 500V AC
MECHANICAL:
DURABILITY = 300 OPERATIONS (GOLD),
50 OPERATIONS (TIN)
ENVIRONMENTAL:
TEMPERATURE RANGE = -40°C TO +105°C
PACKING:
BAG

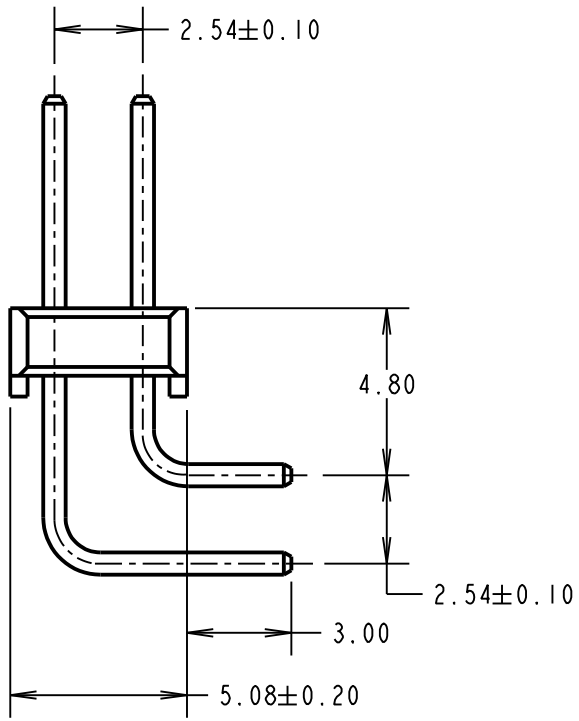

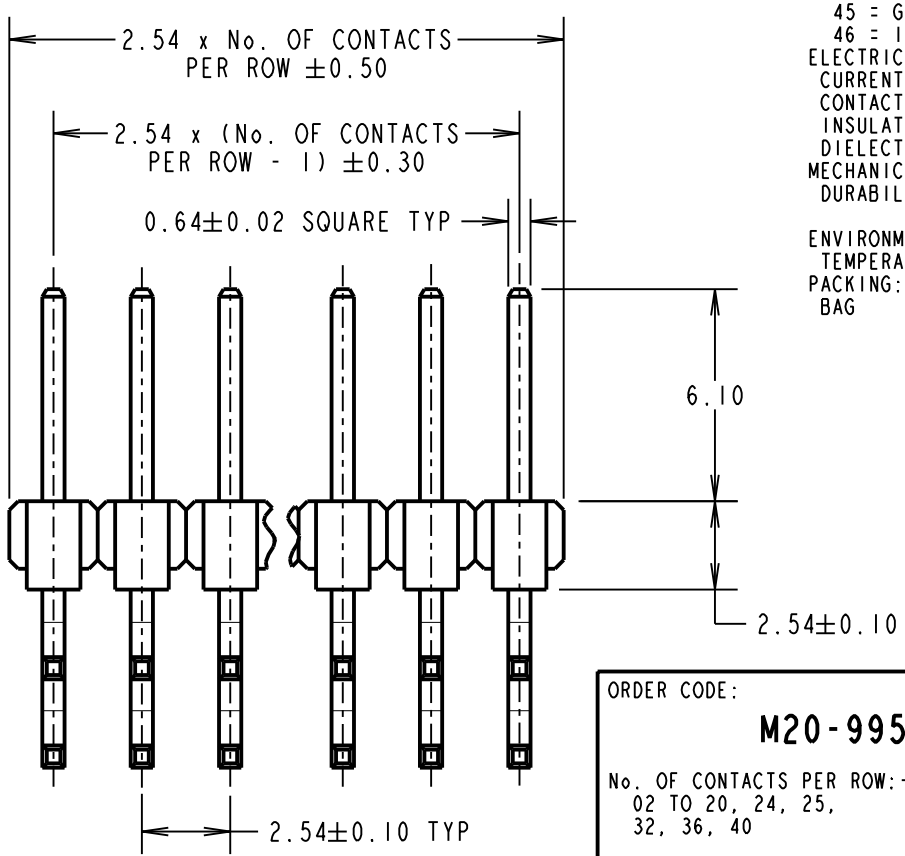

ORDER CODE:
M20-995XXXX
No. OF CONTACTS PER ROW:
02 TO 20, 24, 25,
32, 36, 40
FINISH:
45 = GOLD
46 = 100% TIN

NAME	ISS.	DATE	C/NOTE
MGP	24	17.12.18	21677

APPROVED: MGP
CHECKED: SB
DRAWN: P. ALEXANDER
CUSTOMER REF.:
ASSEMBLY DRG:

HARWIN
www.harwin.com
technical@harwin.com

THIS DRAWING AND ANY INFORMATION OR DESCRIPTIVE MATTER SET OUT HEREON ARE CONFIDENTIAL AND COPYRIGHT PROPERTY OF THE HARWIN GROUP AND MUST NOT BE DISCLOSED, LOANED, COPIED OR USED FOR MANUFACTURING, TENDERING OR FOR ANY OTHER PURPOSE WITHOUT THEIR WRITTEN PERMISSION.

TOLERANCES
~~X = ±1mm~~
~~X.X = ±0.50mm~~
~~X.XX = ±0.10mm~~
~~X.XXX = ±0.01mm~~
ANGLES = ±5°
UNLESS STATED

MATERIAL: SEE ABOVE
FINISH: SEE ABOVE
S/AREA: mm²

TITLE: 2.54mm PITCH DIL HORIZONTAL PC TAIL PIN HEADER ASSEMBLY

DRAWING NUMBER: M20-995XXXX

SHT 2 OF 2