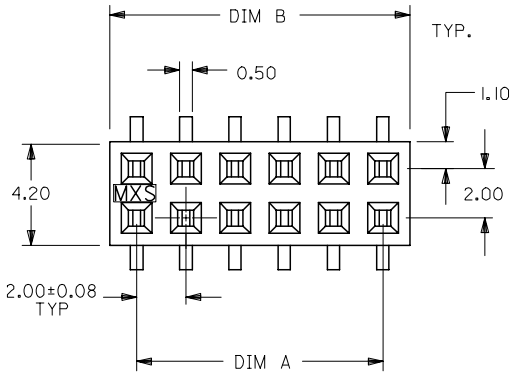

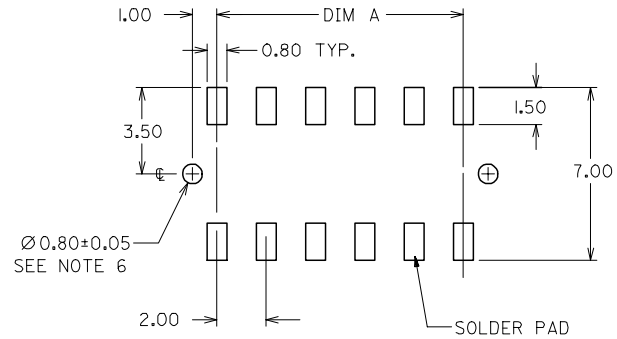

RECOMMENDED PCB LAYOUT

PART NUMBER	CKT. SIZE	DIM A	DIM B
87381-06**	6	4.00	6.00
87381-08**	8	6.00	8.00
87381-10**	10	8.00	10.00
87381-12**	12	10.00	12.00
87381-14**	14	12.00	14.00
87381-16**	16	14.00	16.00
87381-18**	18	16.00	18.00
87381-20**	20	18.00	20.00
87381-22**	22	20.00	22.00
87381-24**	24	22.00	24.00
87381-26**	26	24.00	26.00
87381-28**	28	26.00	28.00
87381-30**	30	28.00	30.00
87381-32**	32	30.00	32.00
87381-34**	34	32.00	34.00
87381-36**	36	34.00	36.00
87381-38**	38	36.00	38.00
87381-40**	40	38.00	40.00
87381-42**	42	40.00	42.00
87381-44**	44	42.00	44.00
87381-46**	46	44.00	46.00
87381-48**	48	46.00	48.00
87381-50**	50	48.00	50.00

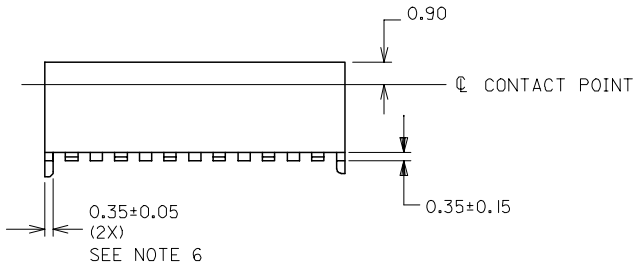

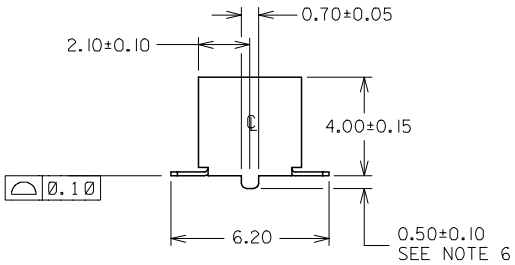

PART NO. LEGEND

87381 - * * * *

CIRCUIT SIZE

PLATING
1
2
7
8
(SEE NOTE 1)

PEG OPTION
0 WITHOUT PEG
1 WITH PEG

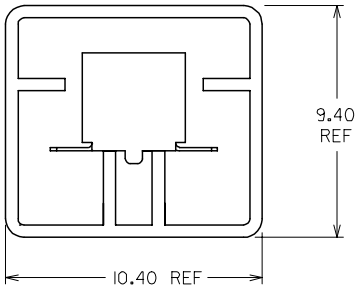

PART IN TUBE

NOTES:

1. PLATING FINISH :
   1 - 0.76um MIN. GOLD IN CONTACT AREA
   1.27um MIN. TIN/LEAD IN SOLDER TAIL AREA
   BOTH OVER 1.27um MIN NICKEL OVERALL
   2 - 0.38um MIN. GOLD IN CONTACT AREA
   1.27um MIN. TIN/LEAD IN SOLDER TAIL AREA
   BOTH OVER 1.27um MIN NICKEL OVERALL
   7 - 0.76um MIN. GOLD IN CONTACT AREA
   1.27um MIN. TIN IN SOLDER TAIL AREA
   BOTH OVER 1.27um MIN NICKEL OVERALL
   8 - 0.38um MIN. GOLD IN CONTACT AREA
   1.27um MIN. TIN IN SOLDER TAIL AREA
   BOTH OVER 1.27um MIN NICKEL OVERALL
2. 12 CKT SIZE SHOWN FOR ILLUSTRATION ONLY. SEE CHART FOR ALL AVAILABLE PART SIZES
3. PRODUCT SPECIFICATION PS-87380 APPLIES
4. COPLANARITY OF SOLDER TAILS ARE TO BE MEAURED BY RESTING THE PART ON A FLAT GAUGE SURFACE
5. OTHER PLATING OPTIONS AVAILABLE. PLEASE CONTACT FACTORY
6. PEG AND PCB HOLE OPTIONAL. SEE PART LEGEND FOR PART CONFIGURATON

REV	DESCRIPTION	
D	ADD ASSY P/N FOR LF	
	EC NO: S2005-0021	
	DRWN:KSEE	2004/08/02
	CH'KD:PTLIM	2004/08/02
	APPR:SKTOH	2004/08/03

QUALITY SYMBOLS
▼=0
▽=0

GENERAL TOLERANCES (UNLESS SPECIFIED)

	mm	INCH
4 PLACES	± ---	± ---
3 PLACES	± ---	± ---
2 PLACES	± 0.10	± ---
1 PLACE	± ---	± ---
ANGULAR ± 3 °		

DRAFT WHERE APPLICABLE MUST REMAIN WITHIN DIMENSIONS

DIMENSION STYLE: MM ONLY
SCALE: NTS
DESIGN UNITS: METRIC
THIRD ANGLE PROJECTION

DRAWN BY	TAY	DATE 1993/01/21
CHECKED BY	SKTOH	DATE 1993/01/26
APPROVED BY	RWONG	DATE 1993/01/27

TITLE: SALES DRAWING
MGRID
4MM HT., WITH LOC. PEG

MOLEX INCORPORATED

MATERIAL NO.: SEE TABLE
DOCUMENT NO.: SD-87381-****
SHEET NO.: 1 OF 1
SIZE: A3

THIS DRAWING CONTAINS INFORMATION THAT IS PROPRIETARY TO MOLEX INCORPORATED AND SHOULD NOT BE USED WITHOUT WRITTEN PERMISSION

Mouser Electronics

Authorized Distributor

Click to View Pricing, Inventory, Delivery & Lifecycle Information:

Molex:

87381-5007 87381-4007 87381-4008