THIS DRAWING IS UNPUBLISHED. RELEASED FOR PUBLICATION 20
© COPYRIGHT 20 BY TYCO ELECTRONICS CORPORATION, ALL INTERNATIONAL RIGHTS RESERVED.

LOC	DIST
AD	00

REVISIONS

P	LTR	DESCRIPTION	DATE	DWN	APVD
	B	REVISED/REDRAWN PER ECO-09-020027	16OCT2009	DH	JE

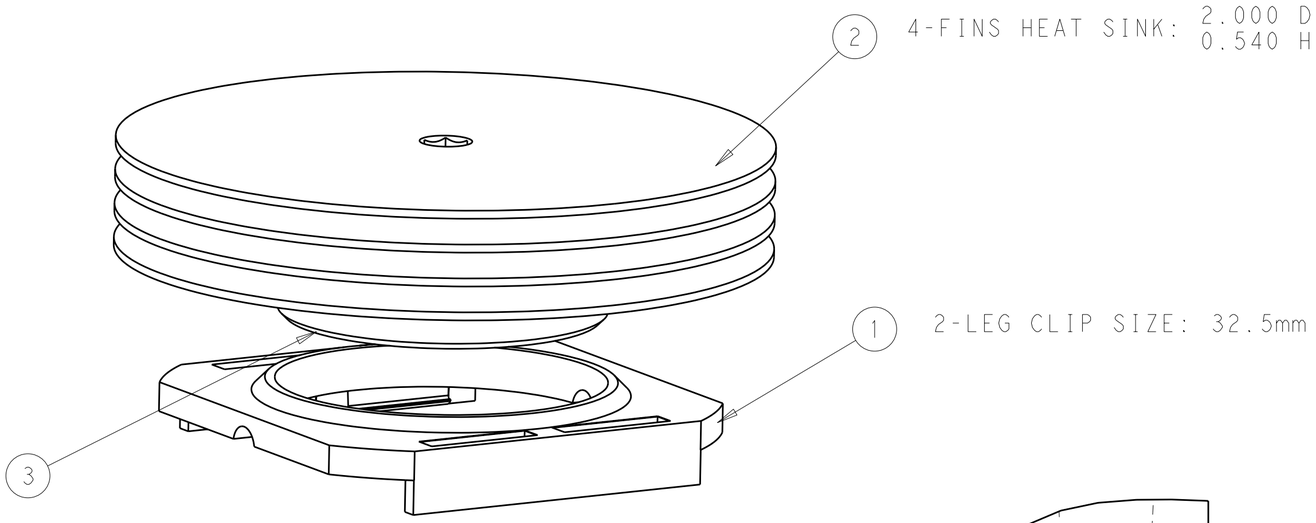

NOTE:

1. MATERIAL:
   HEAT SINK: ALUM. (BLACK ANODIZED)
   CLIP: BLACK PEI (UL94-VO)

2. BEFORE THE HEATSINK APPLICATION, THE USER SHOULD IDENTIFY THE SPECIFICATION OF MAXIMUM LOAD ON THE BGA PAKAGE.

   HEAT SINK TORQUE SPECIFICATIONS CONVERTED TO FORCE.

   BARE DIE PACKAGE:
   2.0 INCH-LB TORQUE=8.1 LBS FORCE
   2.5 INCH-LB TROQUE=10.1 LBS FORCE

   FULL SIZE LID PACKAGE:
   2.0 INCH-LB TORQUE=6.9 LBS FORCE
   2.5 INCH-LB TROQUE=8.7 LBS FORCE

3. REMOVE CLIP WITH REMOVAL TOOL P/N: 1542616-1

4. RoHS COMPLIANT AND CERTIFIED

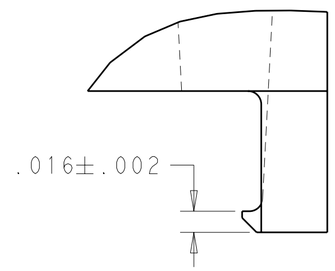

DETAIL A
SCALE 12:1

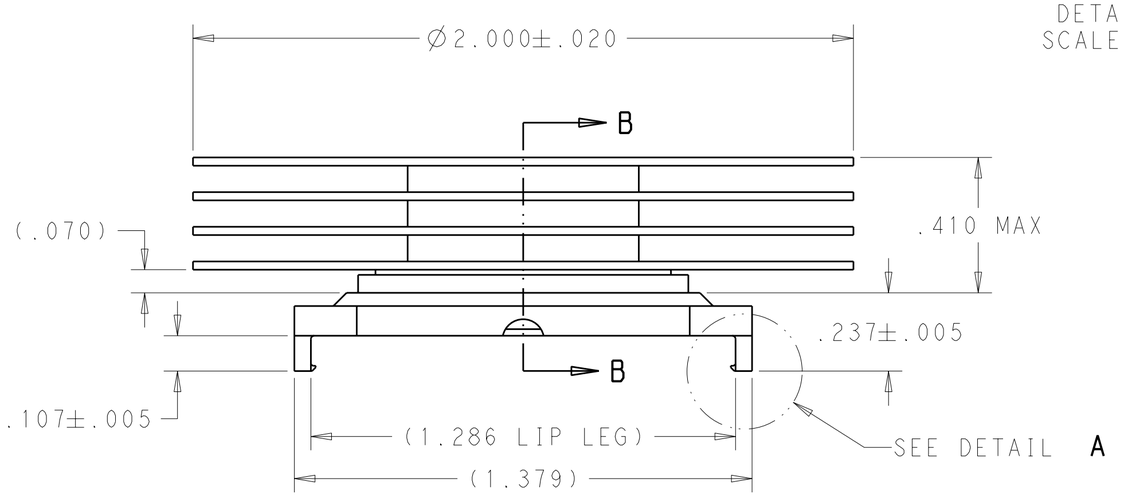

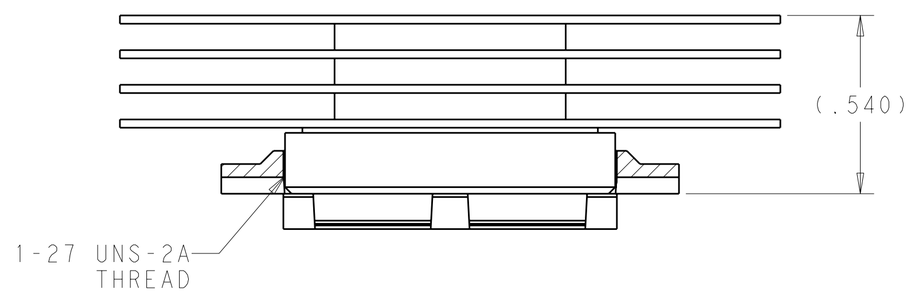

SECTION B-B

ITEM	DESCRIPTION	QTY
3	INTERFACE	1
2	HEAT SINK	1
1	MOUNTING CLIP	1

THIS DRAWING IS A CONTROLLED DOCUMENT FOR TYCO ELECTRONICS CORPORATION IT IS SUBJECT TO CHANGE AND THE CONTROLLING ENGINEERING ORGANIZATION SHOULD BE CONTACTED FOR THE LATEST REVISION.

DIMENSIONS: INCHES

TOLERANCES UNLESS OTHERWISE SPECIFIED:
0 PLC ±-
1 PLC ±.1
2 PLC ±.02
3 PLC ±.005
4 PLC ±.0005
ANGLES ±-

MATERIAL: SEE NOTE
FINISH: SEE NOTE

DWN 16OCT2009 D. HUMBERT
CHK 16OCT2009 J. FABY
APVD 16SEP2009 J. FABY
PRODUCT SPEC -
APPLICATION SPEC -
WEIGHT -

Tyco Electronics
Tyco Electronics
Harrisburg, PA 17105-3608

NAME: 32.5mm HEATSINK ASSEMBLY (HTS512-U)

SIZE	CAGE CODE	DRAWING NO	RESTRICTED TO
A2	00779	C-2-1542006-1	-

CUSTOMER DRAWING | SCALE 3:1 | SHEET 1 OF 1 | REV B

1471-9 (2/09)

Pro/ENGINEER DRAWING

Mouser Electronics

Authorized Distributor

Click to View Pricing, Inventory, Delivery & Lifecycle Information:

TE Connectivity:

6-1542006-8