THIS DRAWING IS UNPUBLISHED. RELEASED FOR PUBLICATION 2003
© COPYRIGHT 2003 Tyco Electronics AMP GmbH ALL RIGHTS RESERVED.

LOC	DIST
A1	-

REVISIONS

P	LTR	DESCRIPTION	DATE	DWN	APVD
	A9	ECR-16-016-334	18NOV2016	FV	RR
	A10	ECR-18-003292	05MAR2018	LZ	RR
	A11	REVISED PER ECR-18-017204	21NOV2018	BW	DC
	A12	ECR-19-003018	12MAR2019	KD	FL

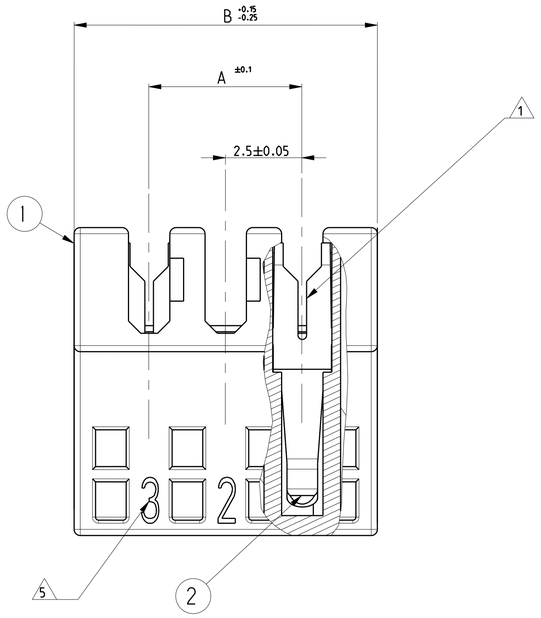

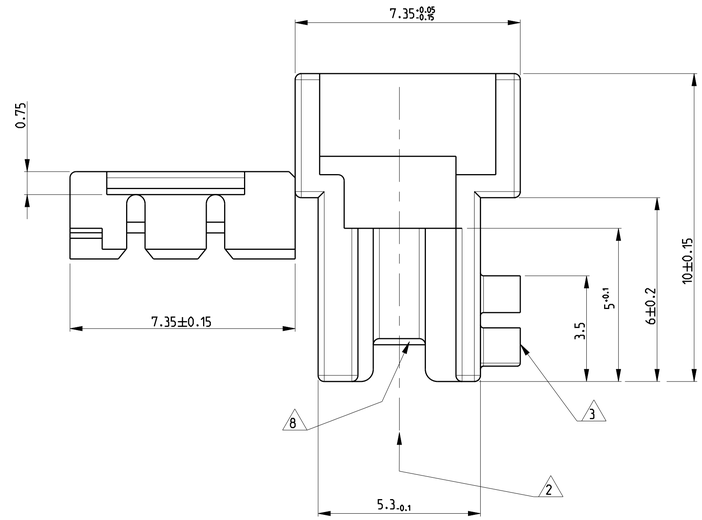

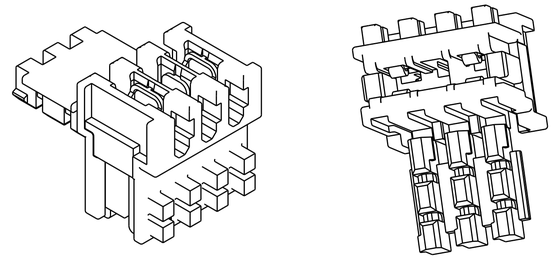

P/N 0-293153-3 AS SHOWN

SCALE 5:1 / 10:1

1. WIRE RANGE : STRANDED 0.22-0.35 mm² (INS. DIA. 1.30±0.1)
2. MATING PART: PCB FRAME P/N 964575 (PCB THK 1.5±0.14 COPPER CLADDING INCLUDED) SEE PRODUCT SPEC. 108-18056 FOR FRAME APPLICATION
3. KEYING RIBS TO BE REMOVED BY TERMINATION MACHINE
4. CUT OFF DIMENSION DUE TO PRODUCTION PROCESS
5. CIRCUIT No. IDENTIFICATION
6. TE TRADEMARK (OPTIONAL POSITION)
7. TAMPOGRAPHIC COLOUR CODE AREA (P/Ns IDENTIFICATION BEFORE CRIMPING)
8. POLARIZATION RIB BETWEEN CAVITIES. (SEE BELOW TYPICAL POLARIZATION CUTOFF ON PCB)
9. PRELIMINARY PART NOT RELEASED FOR PRODUCTION.
10. PBT GF
11. PBT GF, GWEPT 750 NO-FLAME, NATURAL

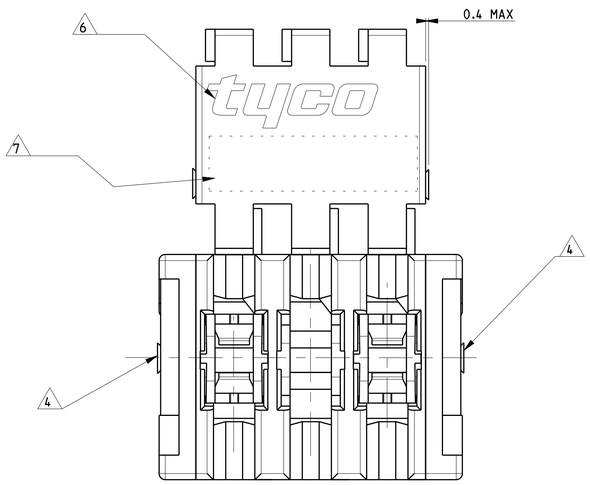

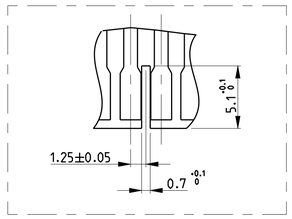

NOTES:	COLOUR CODE 7	CONTACT LOADING	POLARIZ. RIB POS. 8	HSG POS.	DIM.A	DIM.B	10 TE P/N	11 TE P/N
9	YELLOW	SELECTIVELY 1.3.5.7.9	1/2	9	20.0	24.9	/	7-2311505-9
9	-	SELECTIVELY 1.4.7.8.9	2/3	9	20.0	24.9	2-293153-9	/
	BLUE	SELECTIVELY 1.2.4.5.6.7.8.9	2/3	9	20.0	24.9	1-293153-9	6-2311505-9
	BLACK	SELECTIVELY 1.3.4.6.8.9					0-293153-9	5-2311505-9
9	RED	SELECTIVELY 1.2.3.7.8	1/2	8	17.5	22.4	0-293153-8	2-2311505-8
9	BLACK	SELECTIVELY 1.3.5.6.7	2/3	7	15.0	19.9	1-293153-7	/
	BLACK	SELECTIVELY 1.4.5.6.7	2/3	7	15.0	19.9	0-293153-7	6-2311505-7
	BLACK	SELECTIVELY 1.3.4.6	1/2	6	12.5	17.4	2-293153-6	6-2311505-6
	RED	SELECTIVELY 1.3.4.6	2/3	6	12.5	17.4	1-293153-6	5-2311505-6
	BLACK	SELECTIVELY 1.2	1/2	6	12.5	17.4	0-293153-6	4-2311505-6
	BLACK	SELECTIVELY 3.4	3/4	4	7.5	12.4	0-293153-4	2311505-4
	BLACK	SELECTIVELY 1.3	1/2	3	5.0	9.9	0-293153-3	8-2311505-3

Q.TY	MATERIAL	DESCRIPTION	ITEM
-	-	-	-
SEE TABLE	PH. BRONZE. TIN PLATED	IDC RECEPTACLE CONTACT	2
	PBT GLASS FIBER FILLED	FEMALE HOUSING	1
1	REVISIONE DELL'ASSEMBLATO (REVISION OF EACH ASSY NO)		
Q.TA' PER ASSEMBLATO (QTY REQ'D PER ASSY)	ELENCO DEI COMPONENTI (PARTS LIST)		

THIS DRAWING IS A CONTROLLED DOCUMENT.

DIMENSIONS: mm

TOLERANCES UNLESS OTHERWISE SPECIFIED:
0 PLC ± 0.2
1 PLC ± 0.2
2 PLC ± 0.2
3 PLC ± -
4 PLC ± -
ANGLES ±1°

MATERIAL SEE TABLE -

FINISH -

DWN	C.CORDALO	28NOV2005
CHK	G.TURCO	28NOV2005
APVD	G.TURCO	28NOV2005
PRODUCT SPEC	108-18056	
APPLICATION SPEC	114-18049-1	
WEIGHT	-	

TE Connectivity

NAME DUOPLUG 2.5 FEMALE CONNECTOR STANDARD VERSION, KEYED (SELECTIVELY LOADED)

SIZE	CAGE CODE	DRAWING NO	RESTRICTED TO
A1	00779	C-293153	

CUSTOMER DRAWING | SCALE 10:1 | SHEET 1 OF 1 | REV A12

4805 (3/11)