THIS DRAWING IS UNPUBLISHED. RELEASED FOR PUBLICATION -,- .
© COPYRIGHT - By - ALL RIGHTS RESERVED.

REVISIONS					
P	LTR	DESCRIPTION	DATE	DWN	APVD
	T	REV PER ECO 17-000132	5-5-17	CT	DM

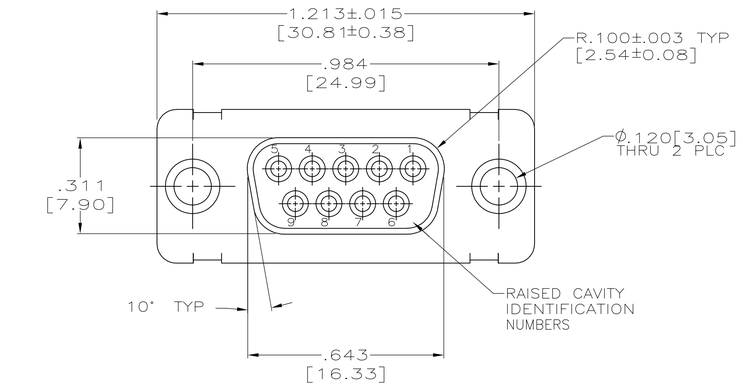

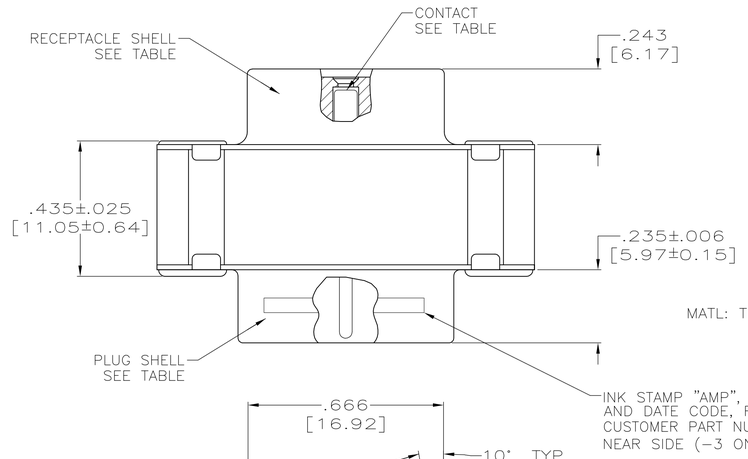

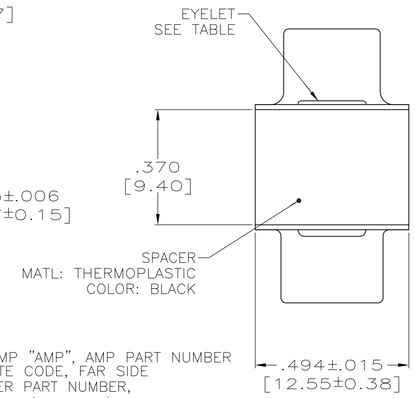

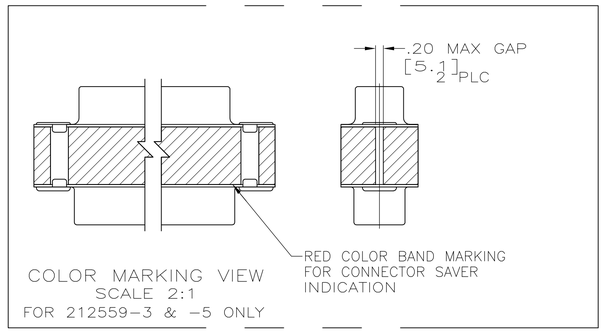

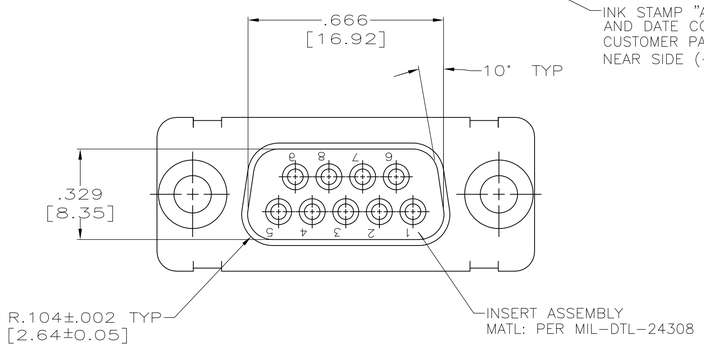

1. CONTACTS INCLUDED IN ASSEMBLY.
2. MATL: STEEL, PER ASTM-A-109.
3. FINISH: CADMIUM PER QQ-P-416.
4. CONTACT
   BODY MATL: BERYLLIUM COPPER PER ASTM-B-197.
   BODY FINISH: PLATED GOLD, .000050 MIN THK PER ASTM-B-488 OVER NICKEL, .000050 MIN THK PER QQ-N-290.
   HOOD MATL: STAINLESS STEEL PER ASTM-A-167.
   HOOD FINISH: PASSIVATED PER ASTM-A-380
5. FINISH: PLATED ZINC .00020 MIN THK PER ASTM-B-633. YELLOW CHROMATE FINISH.
6. MATL: BRASS PER ASTM-B-36.
7. FINISH: PLATED GOLD, .000050 MIN THK PER ASTM-B-488 OVER COPPER, .000100 MIN THK PER MIL-C-14550.
8. CONTACT
   BODY MATL: BERYLLIUM COPPER PER ASTM-B-197.
   BODY AND HOOD FINISH: PLATED GOLD, .000050 MIN THK PER ASTM-B-488 OVER COPPER, .000100 MIN THK PER MIL-C-14550.
   HOOD MATL: BRASS PER ASTM-B-36
9. FINISH: PLATED ZINC PER ASTM-B-633 .000200 MIN THK WITH SUPPLEMENTARY CHROMATE (Cr3+).
10. CUSTOMER PART NUMBER MARKING FOR -5

	EYELET	SHELLS	CONTACT	CUSTOMER P/N	PART NO.
	6 9	2 9	4	-	5-212559-1
	6 7	7 6	4	4U884 SOCN R10002677-0101 10	212559-5
OBSOLETE	- -	- -	-	-	212559-4
	6 7	7 6	4	(1J02-101)	212559-3
	6 7	7 6	8	-	212559-2
	6 5	2 3	4	-	212559-1

THIS DRAWING IS A CONTROLLED DOCUMENT.

DIMENSIONS: INCHES

TOLERANCES UNLESS OTHERWISE SPECIFIED:
0 PLC ± -
1 PLC ± -
2 PLC ± -
3 PLC ± .005 [0.13]
4 PLC ± -
ANGLES ± -

MATERIAL -
FINISH -

DWN T. THOMPSON 11-07-94
CHK D. MANTIONE 11-10-94
APVD D. MANTIONE 11-10-94

TE Connectivity

NAME CONNECTOR SAVER, AMPLIMITE 9 POSITION, SIZE 1, SERIES 109 -

PRODUCT SPEC —
APPLICATION SPEC —
WEIGHT 0.000000

SIZE	CAGE CODE	DRAWING NO	RESTRICTED TO
A1	00779	C-212559	—

CUSTOMER DRAWING SCALE 4:1 SHEET 1 OF 1 REV T

4805 (1/15)

Mouser Electronics

Authorized Distributor

Click to View Pricing, Inventory, Delivery & Lifecycle Information:

TE Connectivity:

212559-1