Panasonic

DB2W31800L

Silicon epitaxial planar type

For rectification

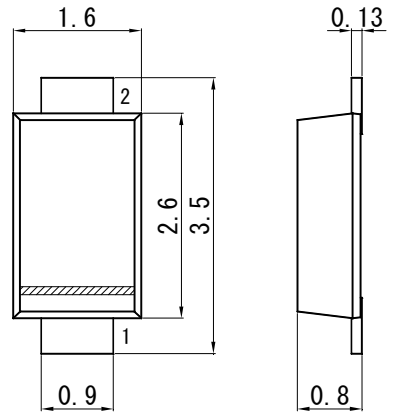

1. Cathode
2. Anode

Panasonic	Mini2-F3-B
JEITA	SC-109B
Code	—

■ Features

- Low forward voltage VF
- Low terminal capacitance Ct
- Halogen-free / RoHS compliant
  (EU RoHS / UL-94 V-0 / MSL:Level 1 compliant)

■ Marking Symbol: 3V

■ Packaging

Embossed type (Thermo-compression sealing) : 3 000 pcs / reel (standard)

■ Absolute Maximum Ratings Ta = 25 °C

Parameter	Symbol	Rating	Unit
Reverse voltage (direct current)	VR	30	V
Forward current (average) *1	IF(AV)	2	A
Non-repetitive peak forward surge current *2	IFSM	30	A
Junction temperature	Tj	125	°C
Operating ambient temperature	Topr	-40 to +85	°C
Storage temperature	Tstg	-55 to +125	°C

Note) *1 For embedded alumina substrate (substrate size: 5 cm×5 cm)
*2 50 Hz sine wave 1 cycle (Non-repetitive peak current)

Internal Connection

Established : 2010-09-08
Revised : 2013-05-29

■ Electrical Characteristics Ta = 25 °C ± 3 °C

Parameter	Symbol	Conditions	Min	Typ	Max	Unit
Forward voltage	VF	IF = 2 A		0.38	0.43	V
Reverse current	IR	VR = 30 V		50	200	μA
Terminal capacitance	Ct	VR = 10 V, f = 1 MHz		70		pF
Reverse recovery time *1	trr	IF = IR = 100 mA, Irr = 0.1 × IR, RL = 100 Ω		23		ns

Note) 1. Measuring methods are based on JAPANESE INDUSTRIAL STANDARD JIS C 7031 Measuring methods for Diodes.
2. This product is sensitive to electric shock (static electricity, etc.). Due attention must be paid on the charge of a human body and the leakage of current from the operating equipment.
3. *1 trr test circuit

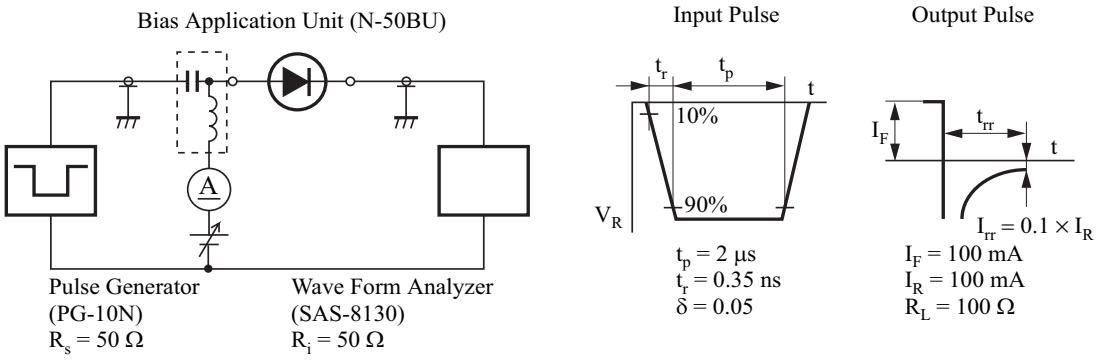

Established : 2010-09-08
Revised : 2013-05-29

Panasonic

Schottky Barrier Diode
DB2W31800L

Technical Data (reference)

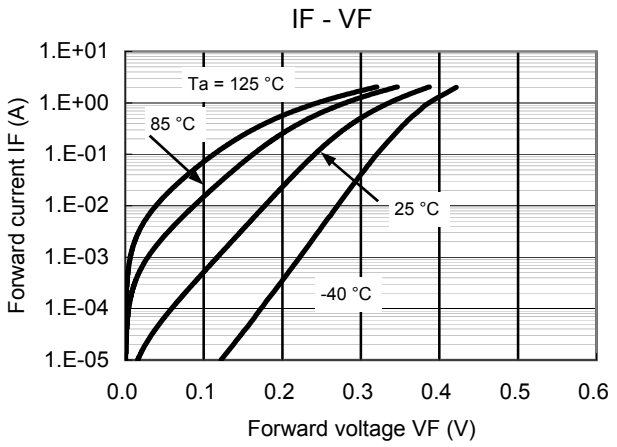

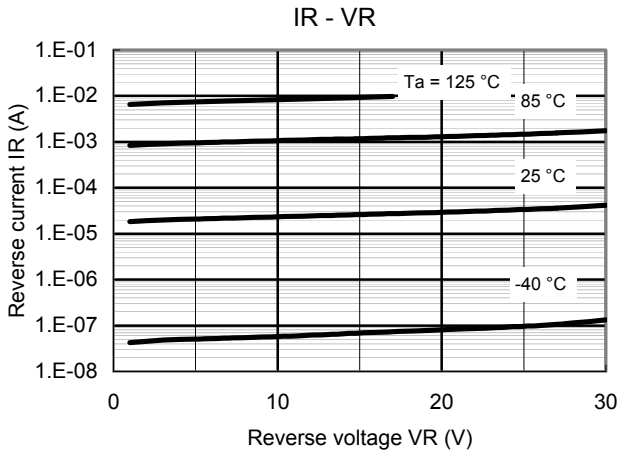

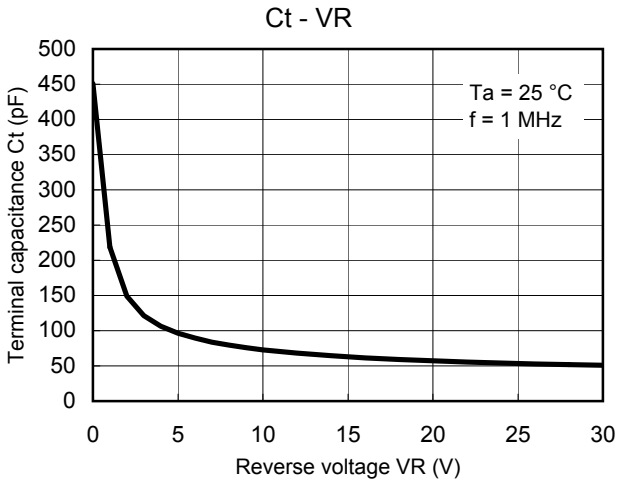

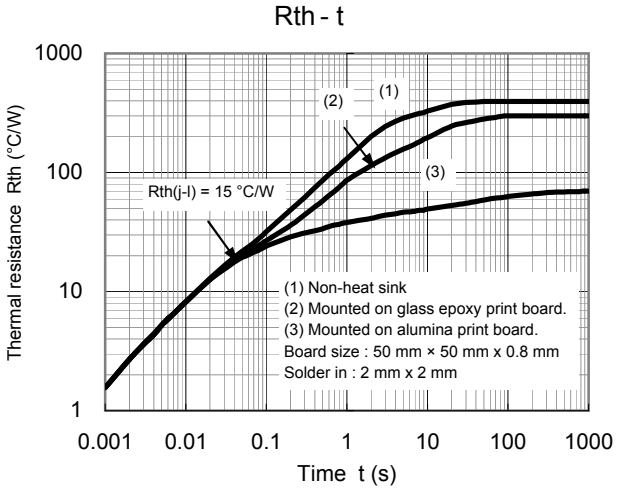

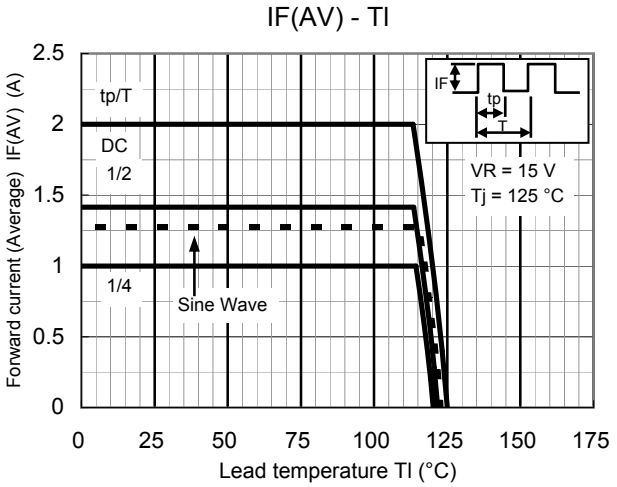

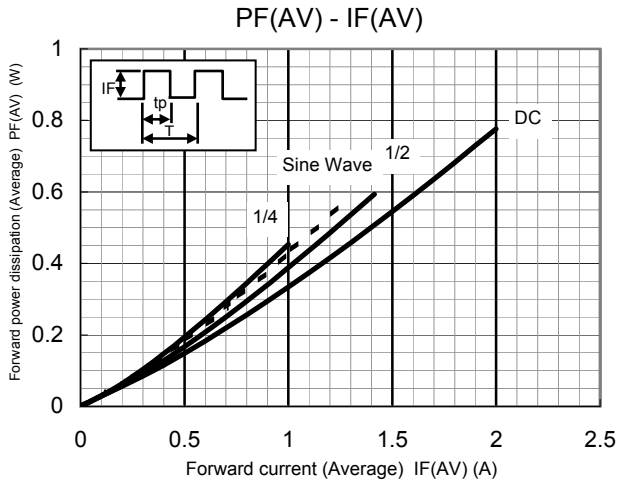

Established : 2010-09-08
Revised : 2013-05-29

Panasonic

Schottky Barrier Diode
DB2W31800L

Mini2-F3-B

Unit: mm

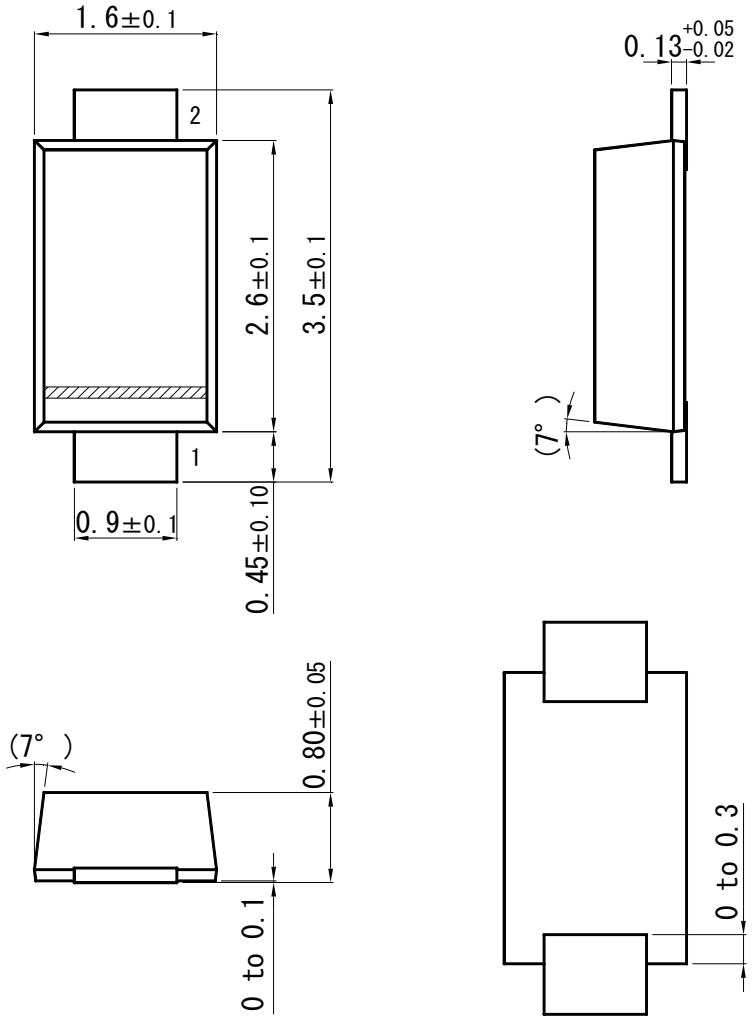

■ Land Pattern (Reference) (Unit: mm)

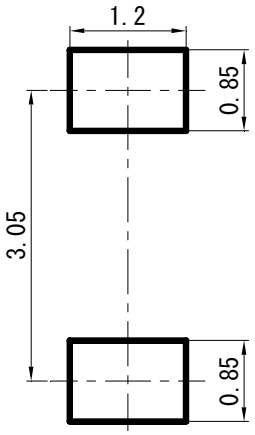

Established : 2010-09-08
Revised : 2013-05-29

Request for your special attention and precautions in using the technical information and semiconductors described in this book

(1) If any of the products or technical information described in this book is to be exported or provided to non-residents, the laws and regulations of the exporting country, especially, those with regard to security export control, must be observed.

(2) The technical information described in this book is intended only to show the main characteristics and application circuit examples of the products. No license is granted in and to any intellectual property right or other right owned by Panasonic Corporation or any other company. Therefore, no responsibility is assumed by our company as to the infringement upon any such right owned by any other company which may arise as a result of the use of technical information de-scribed in this book.

(3) The products described in this book are intended to be used for general applications (such as office equipment, communications equipment, measuring instruments and household appliances), or for specific applications as expressly stated in this book.
Please consult with our sales staff in advance for information on the following applications, moreover please exchange documents separately on terms of use etc.: Special applications (such as for in-vehicle equipment, airplanes, aerospace, automotive equipment, traffic signaling equipment, combustion equipment, medical equipment and safety devices) in which exceptional quality and reliability are required, or if the failure or malfunction of the products may directly jeopardize life or harm the human body.
Unless exchanging documents on terms of use etc. in advance, it is to be understood that our company shall not be held responsible for any damage incurred as a result of or in connection with your using the products described in this book for any special application.

(4) The products and product specifications described in this book are subject to change without notice for modification and/or improvement. At the final stage of your design, purchasing, or use of the products, therefore, ask for the most up-to-date Product Standards in advance to make sure that the latest specifications satisfy your requirements.

(5) When designing your equipment, comply with the range of absolute maximum rating and the guaranteed operating conditions (operating power supply voltage and operating environment etc.). Especially, please be careful not to exceed the range of absolute maximum rating on the transient state, such as power-on, power-off and mode-switching. Otherwise, we will not be liable for any defect which may arise later in your equipment.
Even when the products are used within the guaranteed values, take into the consideration of incidence of break down and failure mode, possible to occur to semiconductor products. Measures on the systems such as redundant design, arresting the spread of fire or preventing glitch are recommended in order to prevent physical injury, fire, social damages, for example, by using the products.

(6) Comply with the instructions for use in order to prevent breakdown and characteristics change due to external factors (ESD, EOS, thermal stress and mechanical stress) at the time of handling, mounting or at customer's process. We do not guarantee quality for disassembled products or the product re-mounted after removing from the mounting board.
When using products for which damp-proof packing is required, satisfy the conditions, such as shelf life and the elapsed time since first opening the packages.

(7) When reselling products described in this book to other companies without our permission and receiving any claim of request from the resale destination, please understand that customers will bear the burden.

(8) This book may be not reprinted or reproduced whether wholly or partially, without the prior written permission of our company.

No.010618

Mouser Electronics

Authorized Distributor

Click to View Pricing, Inventory, Delivery & Lifecycle Information:

Panasonic:
DB2W31800L