REV.	DATE	DESCRIPTION
NC	02/21/03	INITIAL RELEASE

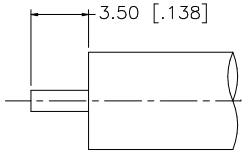

RECOMMENDED CABLE STRIPPING DIMENSIONS

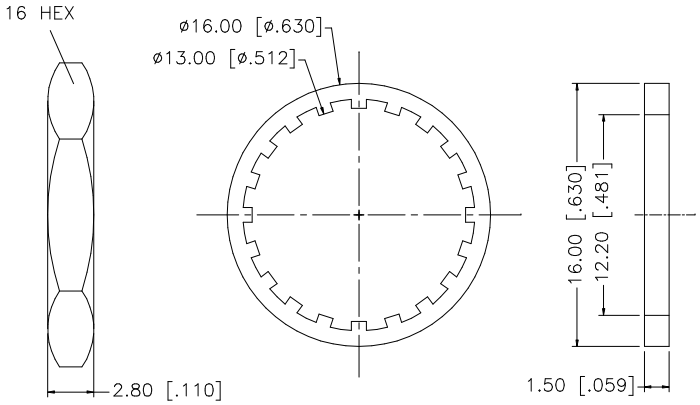

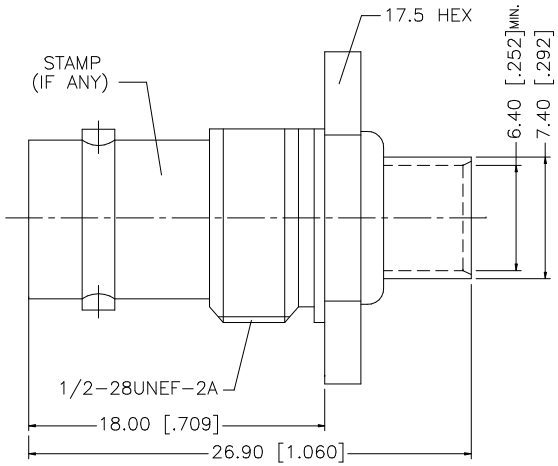

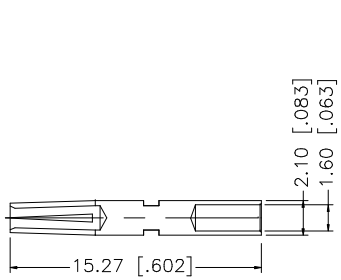

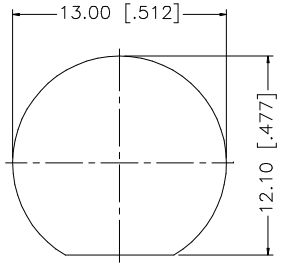

RECOMMENDED MOUNTING HOLE

NOTE:

1. CONTACT PIN TO SOLDER

	DESCRIPTION	MATERIAL	FINISH	QTY
8				
7				
6	HEX NUT	BRASS	NICKEL	1
5	LOCK WASHER	BRASS	NICKEL	1
4	GASKET	RUBBER	RED	1
3	CONTACT PIN	PHOS. BRONZE	GOLD	1
2	INSULATOR	TEFLON	NATURAL	1
1	BODY/HOUSING	BRASS	NICKEL	1

UNLESS OTHERWISE SPECIFIED DIMENSIONS ARE IN MILLIMETERS. DIMENSIONS IN [ ] ARE IN INCHES AND FOR CUSTOMER REFERANCE ONLY.

UNLESS OTHERWISE SPECIFIED TOLERANCES FOR MILLIMETERS ARE:
0.5 – 8mm ± 0.20mm
8 – 30mm ± 0.40mm
30 – 120mm ± 0.50mm

UNLESS OTHERWISE SPECIFIED TOLERANCES FOR INCHES ARE:
.020 – .315 = ± 0.007"
.315 – 1.180 = ± 0.015"
1.180 – 4.724 = ± 0.020"

DO NOT SCALE DRAWING

APPROVALS		DATE
DRAWN	G.R.S.	02/21/03
CHECKED		
ISSUED		
SHEET	1 OF 1	
CAD FILE	C:/122/122489.DWG	

Amphenol Connex

PART DESCRIPTION: BNC BULKHEAD DIRECT SOLDER JACK (FOR .250" SEMI-RIGID CABLE)

PART NO. 112714

DWG. NO. 112714.DWG | REV. NC | SIZE A | SCALE NA

Mouser Electronics

Authorized Distributor

Click to View Pricing, Inventory, Delivery & Lifecycle Information:

Amphenol:
112714