THIS DRAWING IS UNPUBLISHED. RELEASED FOR PUBLICATION 2000
© COPYRIGHT 2000 BY TYCO ELECTRONICS CORPORATION. ALL RIGHTS RESERVED.

PROJEKT NO.
A98-52140
B909529

LOC A1 | DIST

REVISIONS

P	LTR	DESCRIPTION	DATE	DWN	APVD
	H1	SEE E-06-020971	31AUG2006	SC	HSCH
	G1	SEE PCN E-06-005377	06MAR2006	HSCH	VB
	F2	SEE PCN EG00-2391-01	08AUG2001	HSCH	VB
	H	SEE E-06-018039	26JUL2006	SC	HSCH

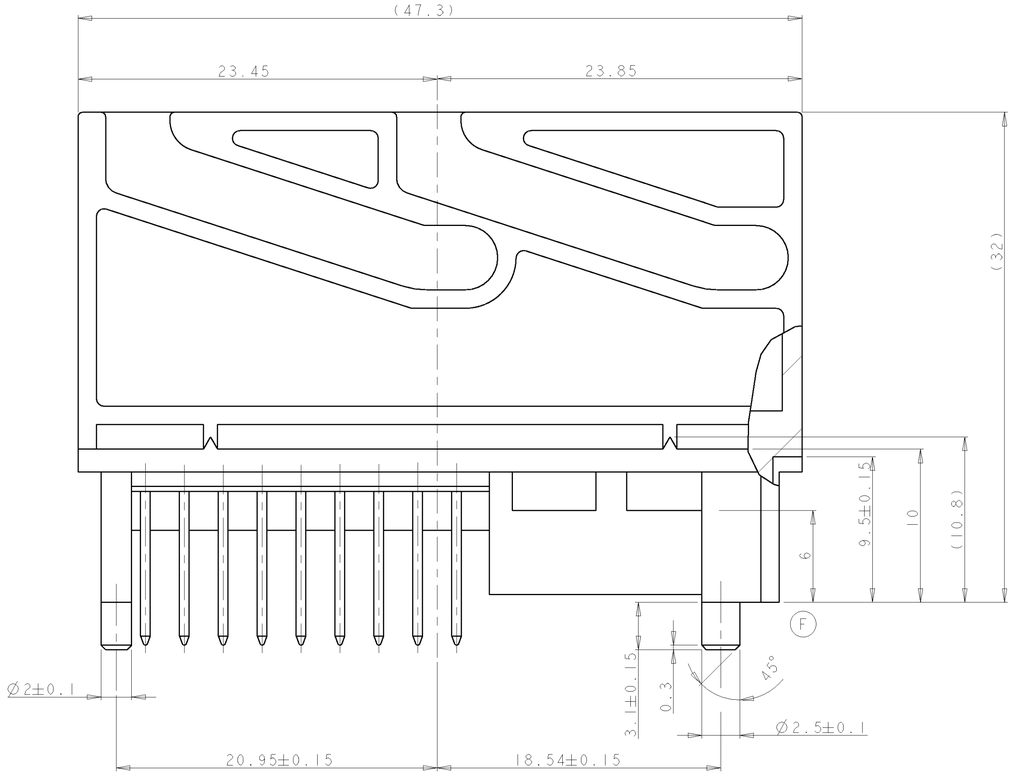

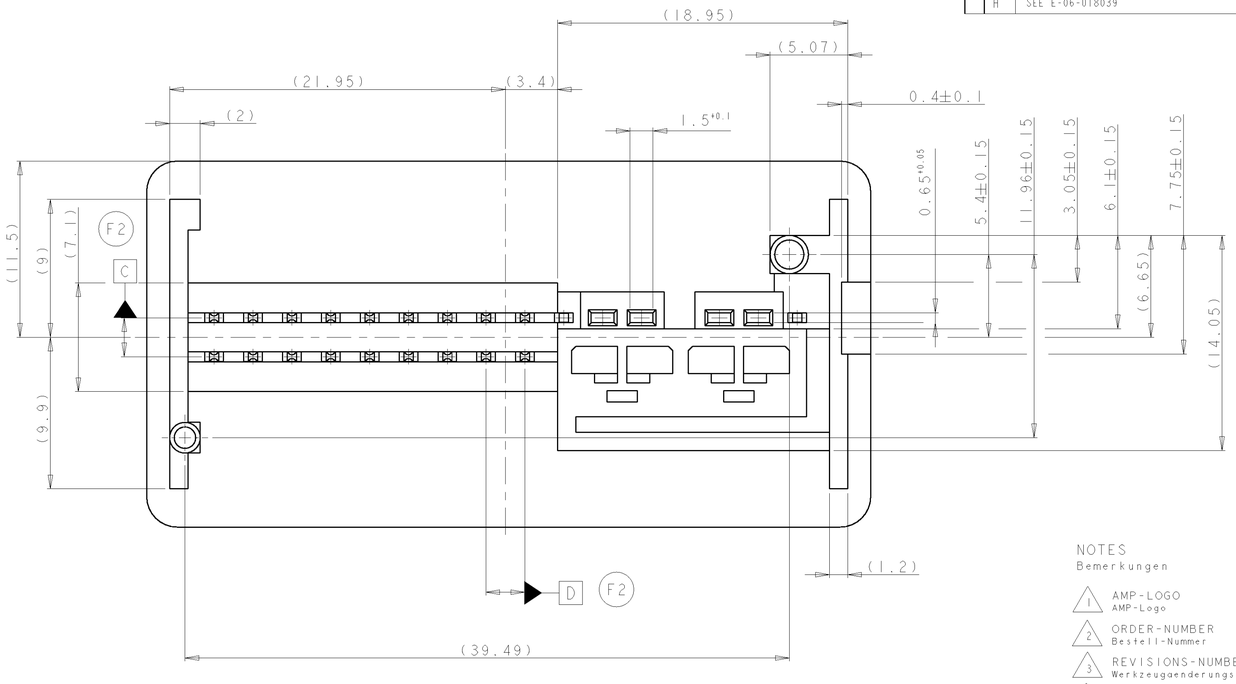

NOTES
Bemerkungen

1. AMP-LOGO
   AMP-Logo
2. ORDER-NUMBER
   Bestell-Nummer
3. REVISIONS-NUMBER
   Werkzeugaenderungsindex
4. TOOL CAVITY MARKING
   Nestmarkierung
5. CAVITY MARKING
   Kammernummerierung
6. –
   –
7. MATERIAL MARKING
   Werkstoffkennzeichnung
8. PRODUCTION-DATE
   Produktions-Datum

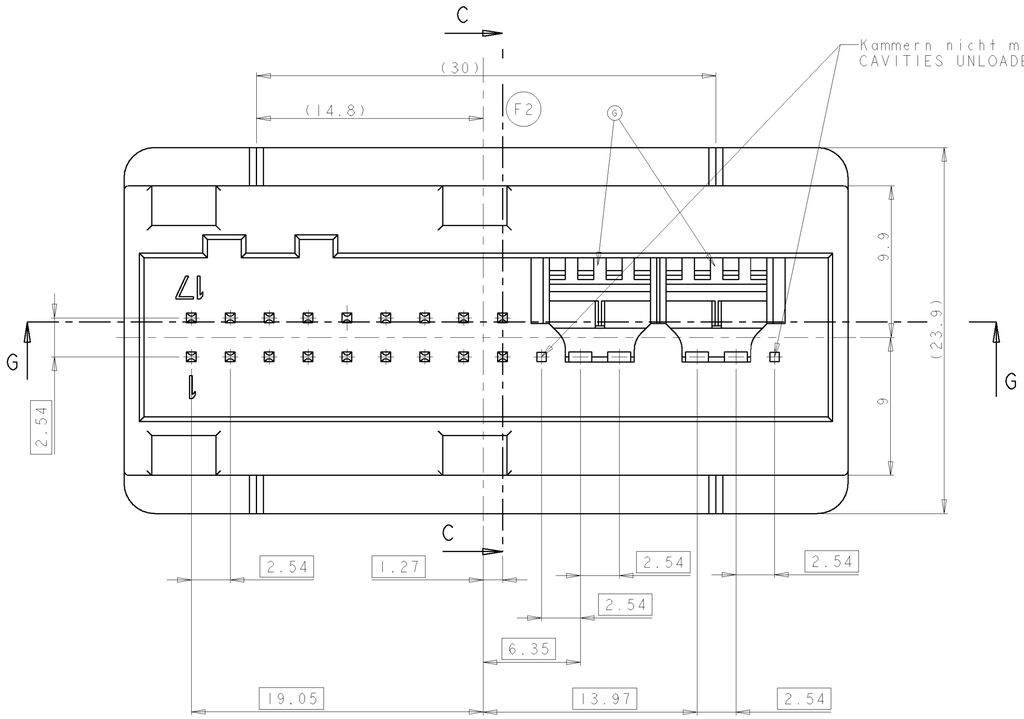

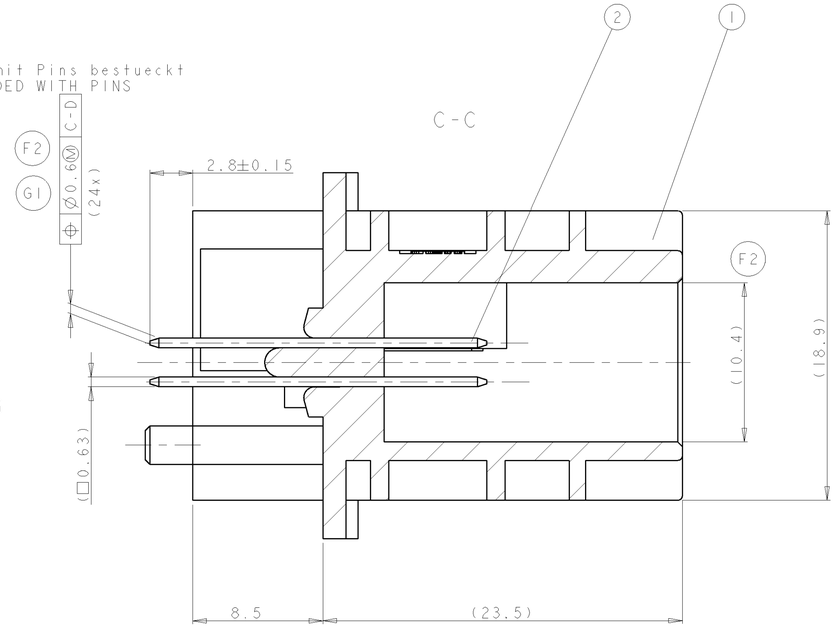

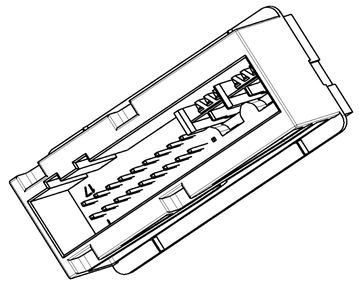

2:1

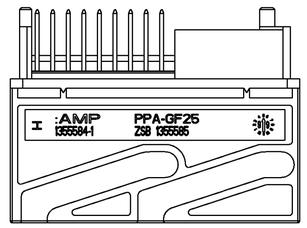

2:1

NUMBER NUMMER	DESCRIPTION BESCHREIBUNG
0-1241726-1	REC.-HOUSING FOR SHORT CIRCUIT BRIDGE
0-1241719-1	COVER WITH SLIDE, 90° FOR SHORT CIRCUIT BRIDGE

COUNTERPARTS
GEGENSTECKER

AMP PART NO. AMP Nummer	REV.	DESCRIPTION Beschreibung	QTY. Stck.	MATERIAL	SURFACE COLOR	ITEM NO.
–	–	–	–	–	–	
		–	–	–	–	
(H) 0-1355585-1	H	AMP MODU II PIN	18	CuSn6	TIN PLATED	2
		PIN HEADER 18+4POS., COD. A	1	PPA-GF 25	BLACK	1

THIS DRAWING IS A CONTROLLED DOCUMENT FOR TYCO ELECTRONICS CORPORATION. IT IS SUBJECT TO CHANGE WITHOUT NOTICE. ANY PRINTED DRAWING OBTAINED SHOULD BE CONTRACTED FOR THE LATEST REVISION.

DIMENSIONS: mm

TOLERANCES UNLESS OTHERWISE SPECIFIED:
0 PLC ±0.3
1 PLC ±0.3
2 PLC ±0.3
3 PLC ±-
4 PLC ±-
ANGLES ±2°

MATERIAL – –
FINISH – –

DWN J. Juin 21JUL99
CHK H.Schmitt 21JUL99
APVD –
PRODUCT SPEC 108-18688
APPLICATION SPEC 114-18334
WEIGHT –

AMP — Tyco Electronics AMP GmbH, D - 63225 Langen

NAME
18+4POS. AMPMODU II PIN HEADER
–
18+4Pol. AMPMODU II Stiftwanne

SIZE	CAGE CODE	DRAWING NO	RESTRICTED TO
A1	00779	C-1355585	–

CUSTOMER DRAWING | SCALE 5:1 | SHEET 1 OF 4 | REV H1

THIS DRAWING IS UNPUBLISHED. RELEASED FOR PUBLICATION 2000
© COPYRIGHT 2000 BY TYCO ELECTRONICS CORPORATION. ALL RIGHTS RESERVED.

PROJEKT NO.
A98-52140
B909529

LOC A1 | DIST

REVISIONS					
P	LTR	DESCRIPTION	DATE	DWN	APVD
	-	SEE SHEET 1	-	-	-
	-	-	-	-	-
	-	-	-	-	-

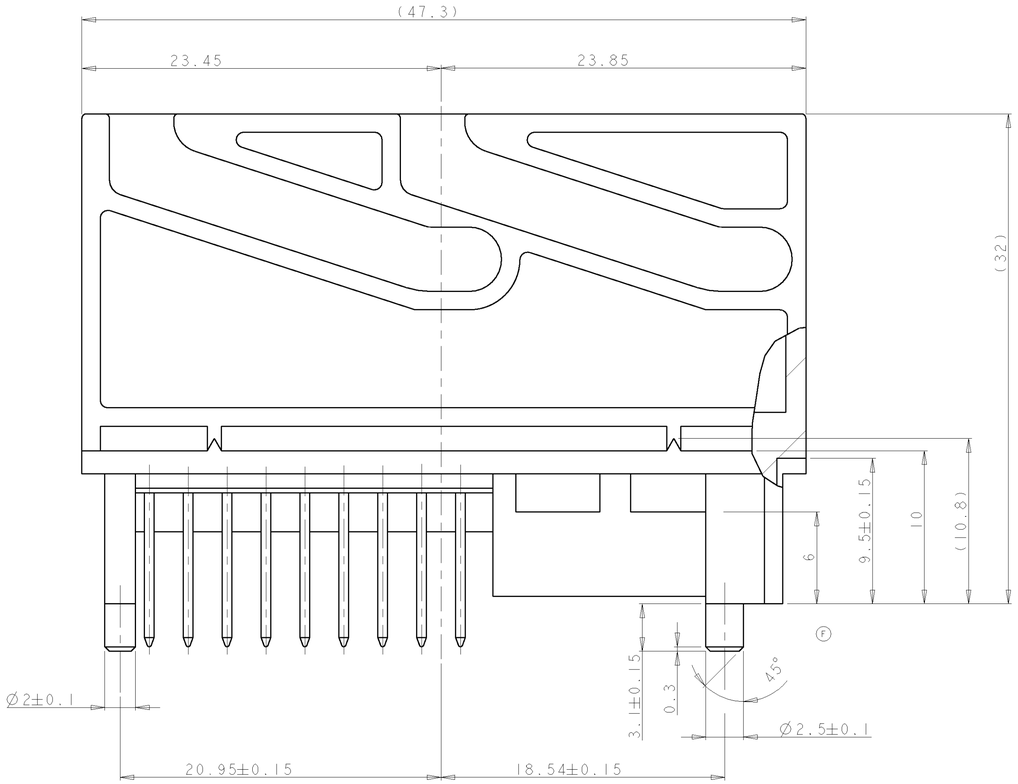

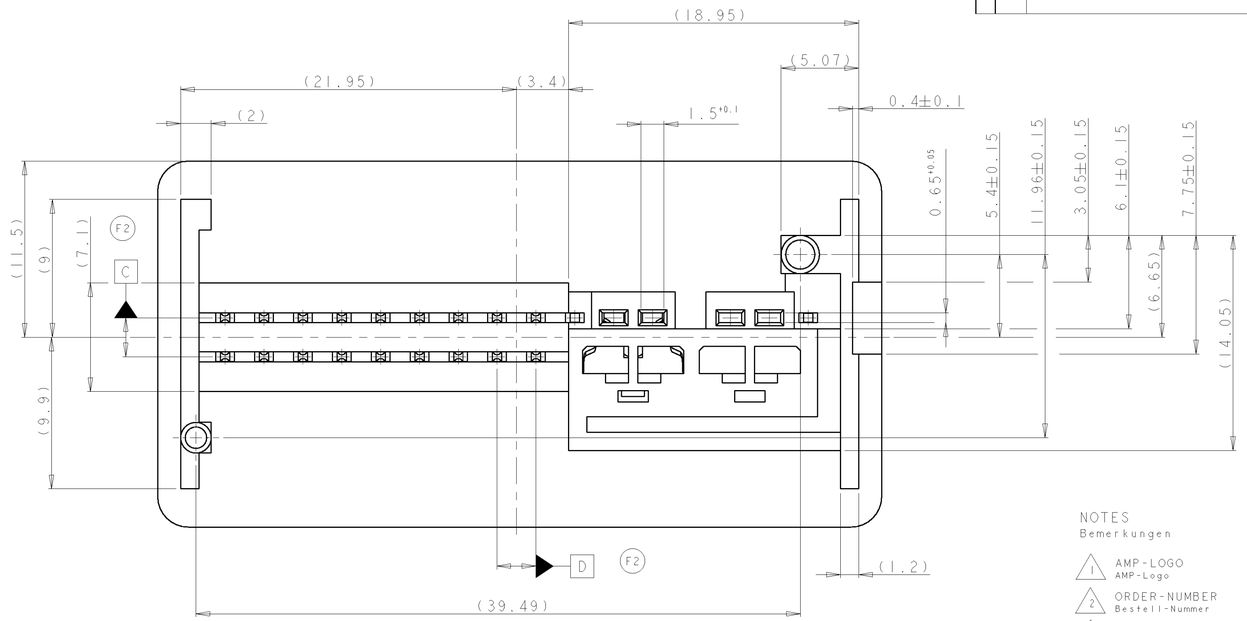

NOTES
Bemerkungen

1. AMP-LOGO
   AMP-Logo
2. ORDER-NUMBER
   Bestell-Nummer
3. REVISIONS-NUMBER
   Werkzeugaenderungsindex
4. TOOL CAVITY MARKING
   Nestmarkierung
5. CAVITY MARKING
   Kammernummerierung
6. -
   -
7. MATERIAL MARKING
   Werkstoffkennzeichnung
8. PRODUCTION-DATE
   Produktions-Datum

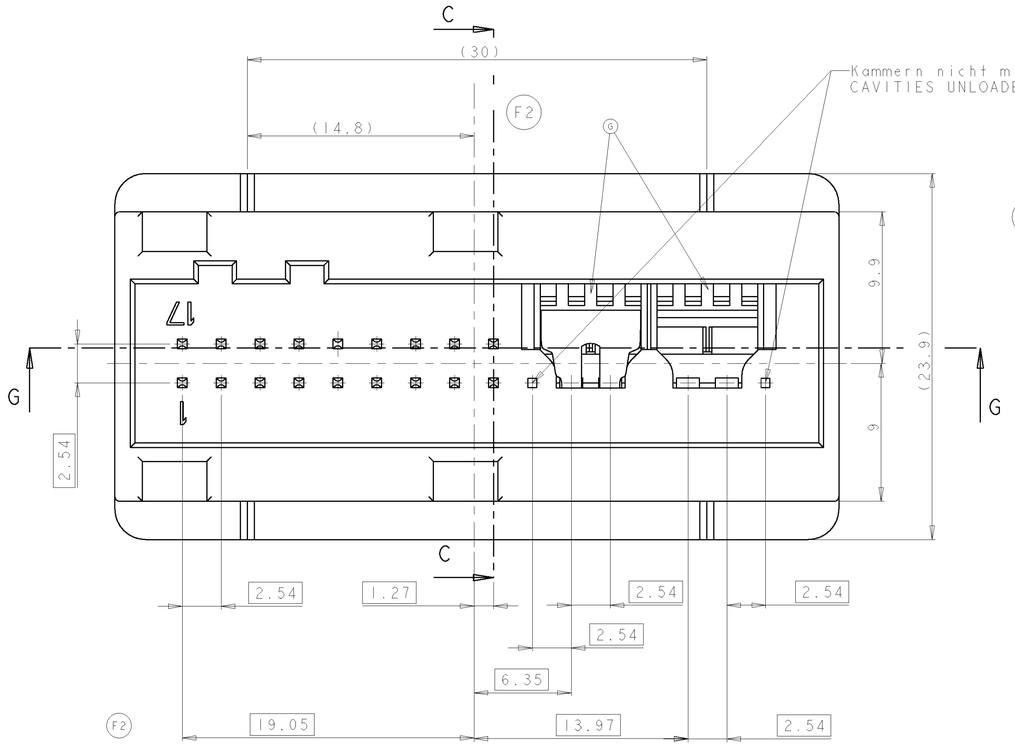

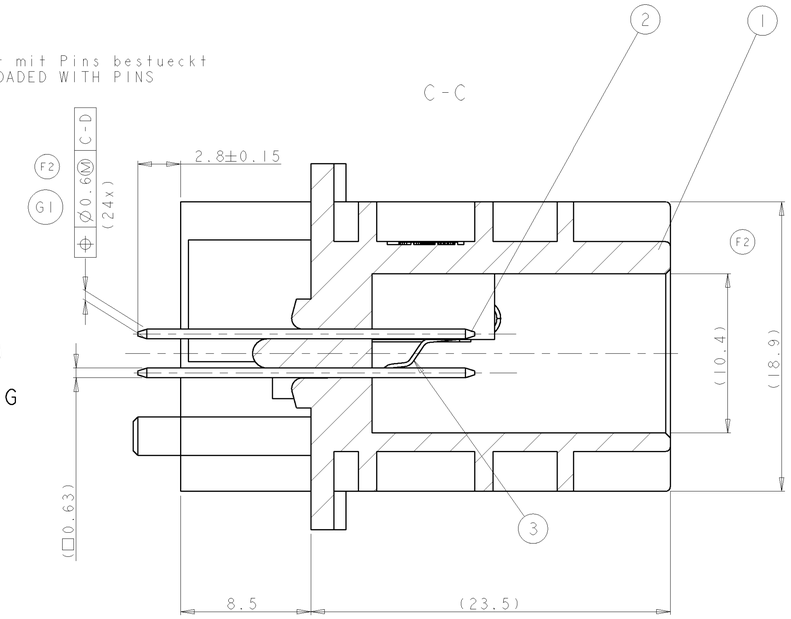

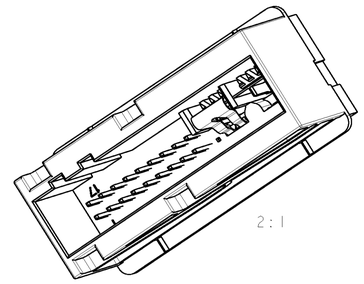

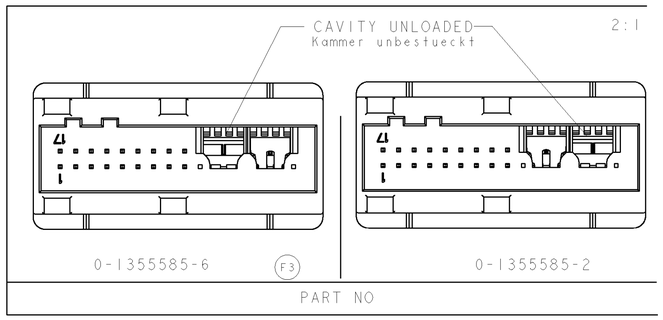

0-1241726-1	REC.-HOUSING FOR SHORT CIRCUIT BRIDGE	
0-1241719-1	COVER WITH SLIDE, 90° FOR SHORT CIRCUIT BRIDGE	
NUMBER NUMMER	DESCRIPTION BESCHREIBUNG	
COUNTERPARTS GEGENSTECKER		

0-1355585-2 AS SHOWN / wie gezeichnet

	AMP PART NO. AMP Nummer	REV.	DESCRIPTION Beschreibung	QTY. Stck.	MATERIAL	SURFACE COLOR	ITEM NO.
H F3	0-1355585-6	C	SHORT CIRCUIT SPRING	1	X12CrNi177	>3.0µm Au selektiv am Kontaktpunkt	3
			AMP MODU II PIN	18	CuSn6	TIN PLATED	2
			PIN HEADER 18+4POS., COD. A	1	PPA-GF 25	BLACK	1
H	0-1355585-2	H	SHORT CIRCUIT SPRING	1	X12CrNi177	≥3.0µm Au selektiv am Kontaktpunkt	3
			AMP MODU II PIN	18	CuSn6	TIN PLATED	2
			PIN HEADER 18+4POS., COD. A	1	PPA-GF 25	BLACK	1

THIS DRAWING IS A CONTROLLED DOCUMENT FOR TYCO ELECTRONICS CORPORATION. IT IS SUBJECT TO CHANGE AND THE CONTROLLING ENGINEERING ORGANIZATION SHOULD BE CONTACTED FOR THE LATEST REVISION.

DIMENSIONS: mm

TOLERANCES UNLESS OTHERWISE SPECIFIED:
0 PLC ±0.3
1 PLC ±0.3
2 PLC ±0.3
3 PLC ±-
4 PLC ±-
ANGLES ±2°

MATERIAL -
FINISH -

DWN H.Schmitt 13OCT00
CHK V.BERGMANN 10AUG01
APVD -
PRODUCT SPEC 108-18688-1
APPLICATION SPEC 114-18334-1
WEIGHT -

AMP Tyco Electronics AMP GmbH
D - 63225 Langen

NAME 18+4POS. AMPMODU II PIN HEADER
-
18+4pol. AMPMODU II Stiftwanne

SIZE A1 | CAGE CODE 00779 | DRAWING NO C-1355585 | RESTRICTED TO -

CUSTOMER DRAWING | SCALE 5:1 | SHEET 2 OF 4 | REV H1

THIS DRAWING IS UNPUBLISHED. RELEASED FOR PUBLICATION 2000
© COPYRIGHT 2000 BY TYCO ELECTRONICS CORPORATION. ALL RIGHTS RESERVED.

PROJEKT NO.
A98-52140
B909529

LOC A1 | DIST

REVISIONS					
P	LTR	DESCRIPTION	DATE	DWN	APVD
	-	SEE SHEET 1	-	-	-
	-	-	-	-	-
	-	-	-	-	-

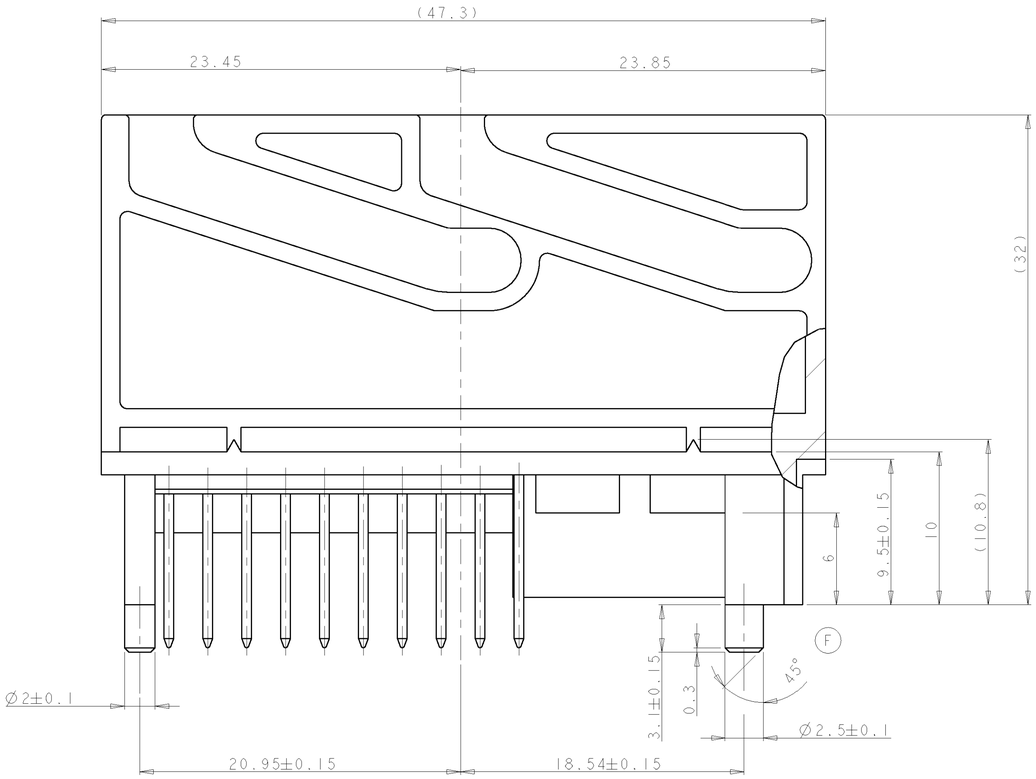

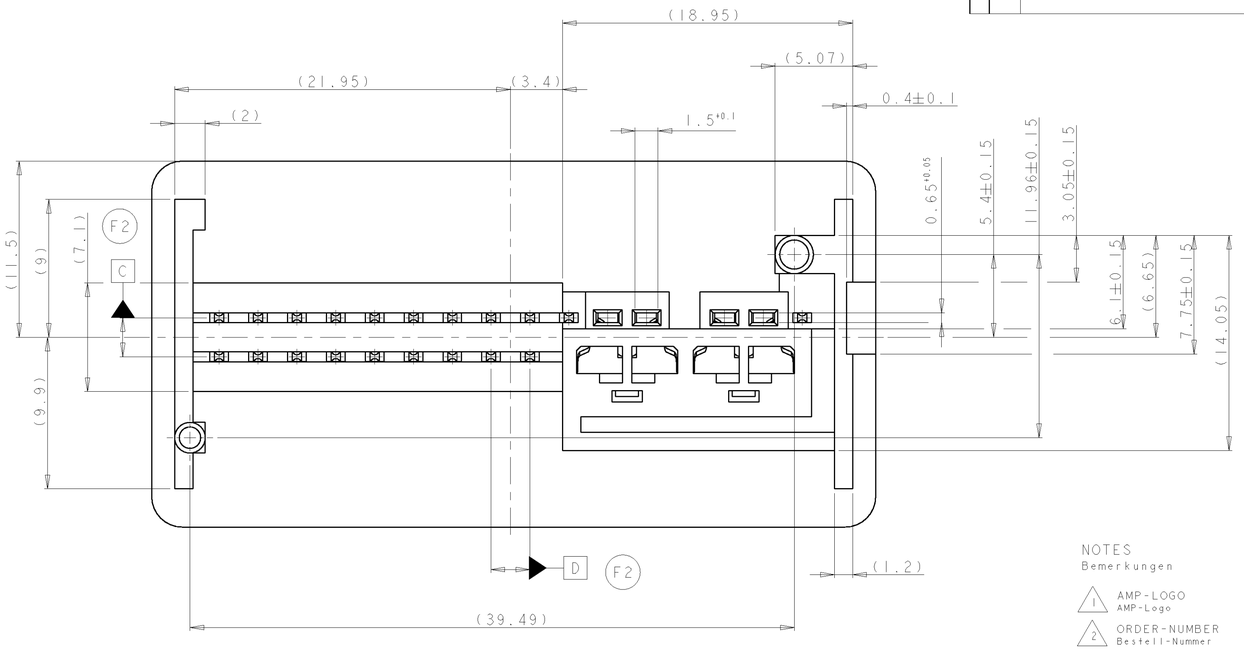

NOTES
Bemerkungen

1. AMP-LOGO
AMP-Logo
2. ORDER-NUMBER
Bestell-Nummer
3. REVISIONS-NUMBER
Werkzeugaenderungsindex
4. TOOL CAVITY MARKING
Nestmarkierung
5. CAVITY MARKING
Kammernummerierung
6. -
-
7. MATERIAL MARKING
Werkstoffkennzeichnung
8. PRODUCTION-DATE
Produktions-Datum

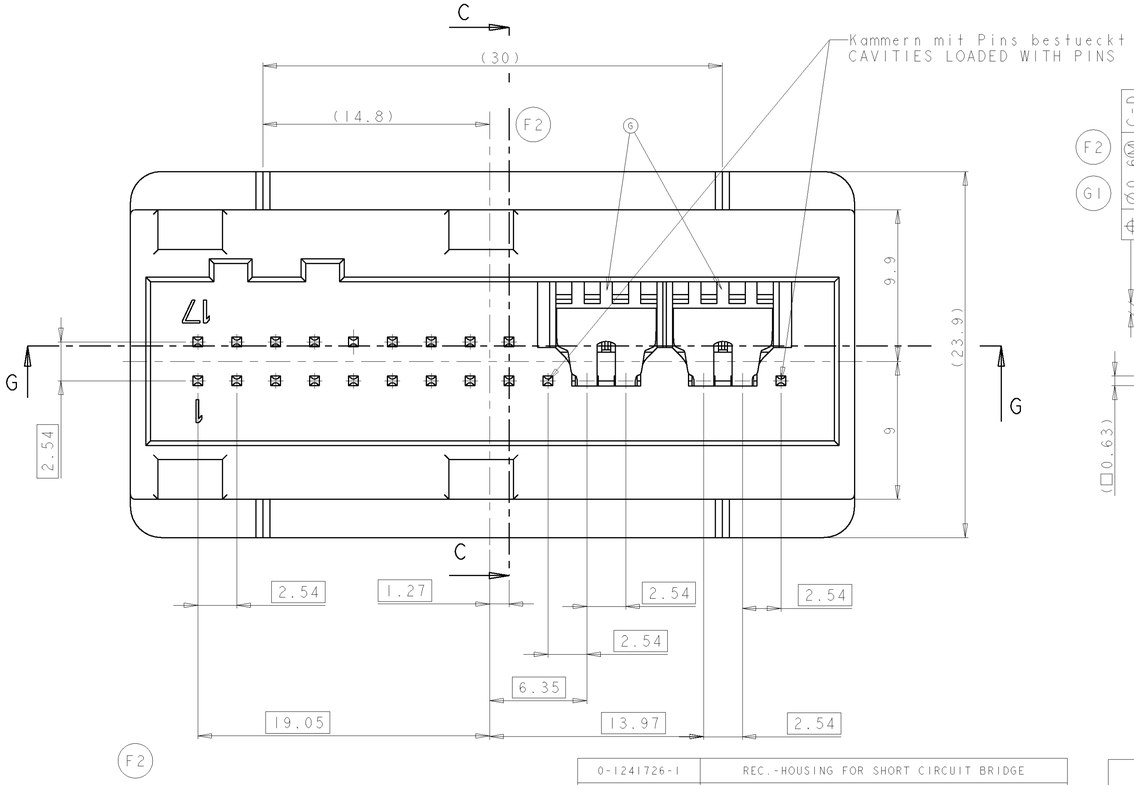

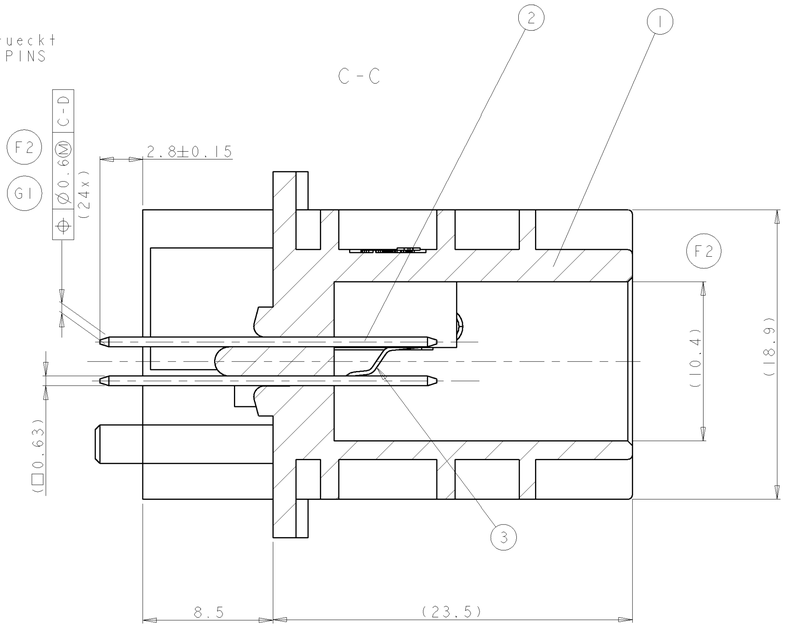

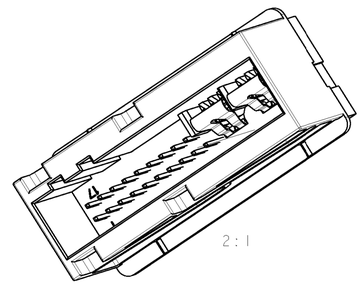

NUMBER NUMMER	DESCRIPTION BESCHREIBUNG
0-1241726-1	REC.-HOUSING FOR SHORT CIRCUIT BRIDGE
0-1241719-1	COVER WITH SLIDE, 90° FOR SHORT CIRCUIT BRIDGE

COUNTERPARTS
GEGENSTECKER

AMP PART NO. AMP Nummer	REV.	DESCRIPTION Beschreibung	QTY. Stck.	MATERIAL	SURFACE COLOR	ITEM NO.
0-1355585-3	H	SHORT CIRCUIT SPRING	2	X12CrNi177	23.0µm Au selektiv am Kontaktpunkt	3
		AMP MODU II PIN	20	CuSn6	TIN PLATED	2
		PIN HEADER 18+4POS., COD. A	1	PPA-GF 25	BLACK	1

THIS DRAWING IS A CONTROLLED DOCUMENT FOR TYCO ELECTRONICS CORPORATION. IT IS SUBJECT TO CHANGE. USE CONTROLLED ENGINEERING ORGANIZATION SHOULD BE CONTACTED FOR THE LATEST REVISION.

DIMENSIONS: mm

TOLERANCES UNLESS OTHERWISE SPECIFIED:
0 PLC ±0.3
1 PLC ±0.3
2 PLC ±0.3
3 PLC ±-
4 PLC ±-
ANGLES ±2°

MATERIAL - -
FINISH - -

DWN 13OCT00 HSchmitt
CHK 09AUG01 V. BERGMANN
APVD -
PRODUCT SPEC 108-18688-1
APPLICATION SPEC 114-18334-1
WEIGHT -

AMP — Tyco Electronics AMP GmbH, D - 63225 Langen

NAME 18+4POS. AMPMODU II PIN HEADER
18+4pol. AMPMODU II Stiftwanne

SIZE	CAGE CODE	DRAWING NO	RESTRICTED TO
A1	00779	G-1355585	-

CUSTOMER DRAWING | SCALE 5:1 | SHEET 3 OF 4 | REV H1

AMP 4805 REV 31MAR2000

THIS DRAWING IS UNPUBLISHED. RELEASED FOR PUBLICATION 2000
© COPYRIGHT 2000 BY TYCO ELECTRONICS CORPORATION. ALL RIGHTS RESERVED.

PROJEKT NO.
A98-52140
B909529

LOC A1 | DIST

REVISIONS

P	LTR	DESCRIPTION	DATE	DWN	APVD
	-	SEE SHEET 1	-	-	-
	-	-	-	-	-
	-	-	-	-	-

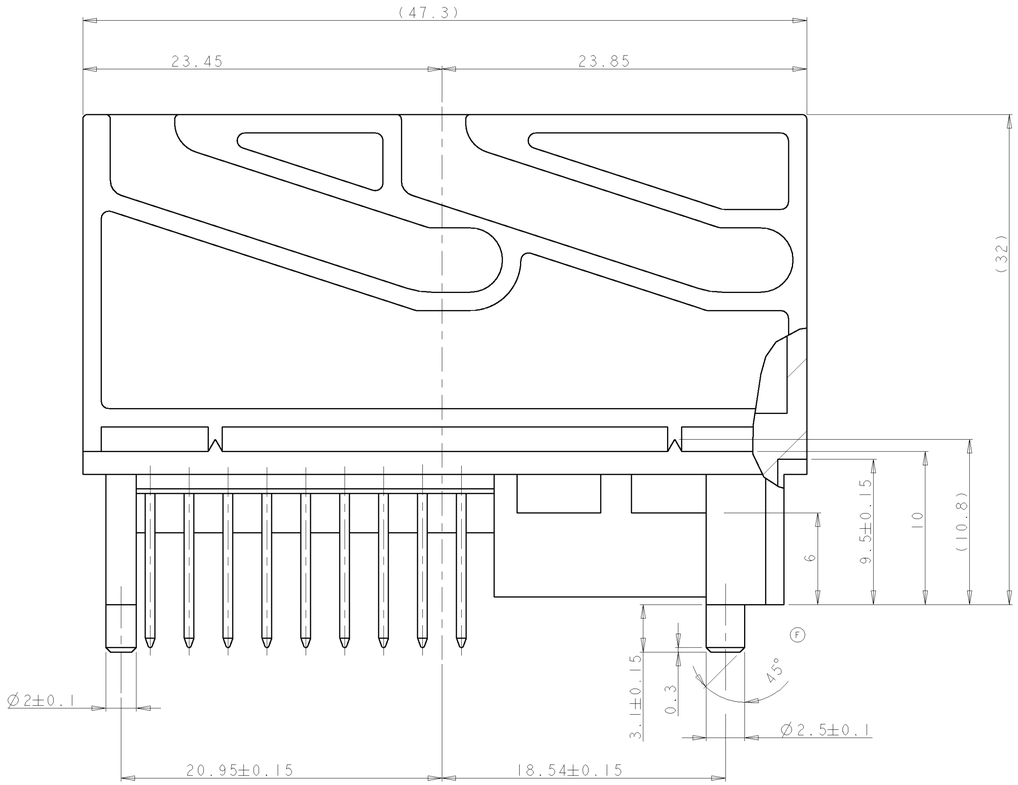

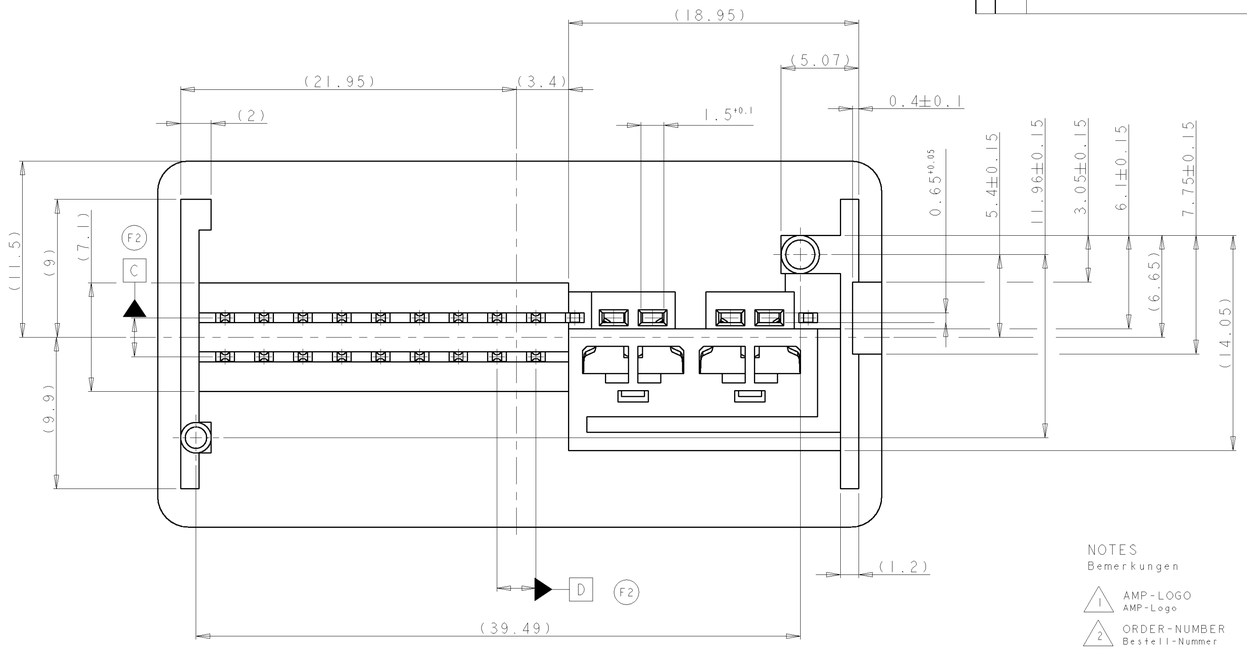

NOTES
Bemerkungen

1. AMP-LOGO
   AMP-Logo
2. ORDER-NUMBER
   Bestell-Nummer
3. REVISIONS-NUMBER
   Werkzeugaenderungsindex
4. TOOL CAVITY MARKING
   Nestmarkierung
5. CAVITY MARKING
   Kammernummerierung
6. -
   -
7. MATERIAL MARKING
   Werkstoffkennzeichnung
8. PRODUCTION-DATE
   Produktions-Datum

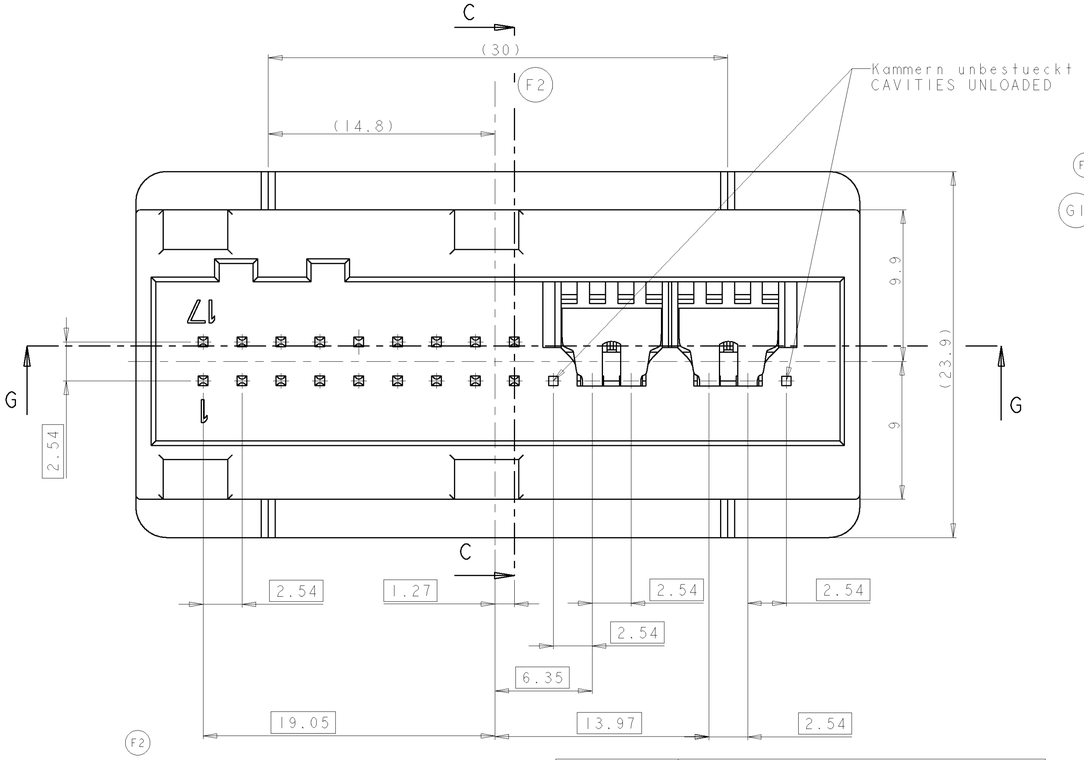

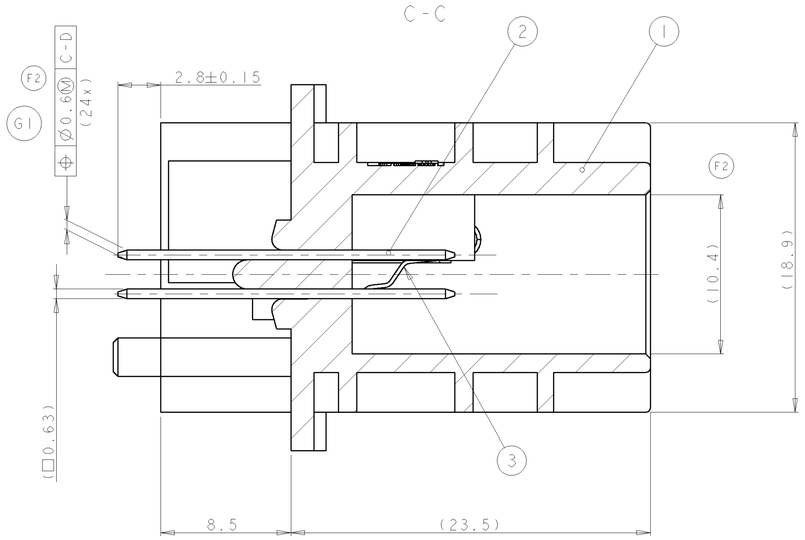

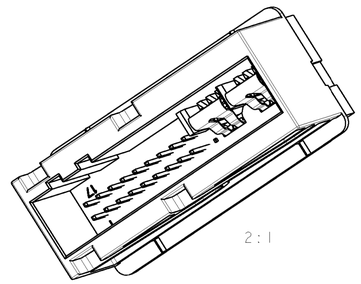

0-1241726-1	REC.-HOUSING FOR SHORT CIRCUIT BRIDGE
0-1241719-1	COVER WITH SLIDE, 90° FOR SHORT CIRCUIT BRIDGE
NUMBER NUMMER	DESCRIPTION BESCHREIBUNG
COUNTERPARTS GEGENSTECKER	

H

AMP PART NO. AMP Bestell-Nr.	REV.	DESCRIPTION Beschreibung	QTY. Stck.	MATERIAL	SURFACE COLOR	ITEM NO.
0-1355585-5	C	SHORT CIRCUIT SPRING	2	X12CrNi177	≥3.0µm Au selektiv am Kontaktpunkt	3
		AMP MODU II PIN	18	CuSn6	TIN PLATED	2
		PIN HEADER 18+4POS., COD. A	1	PPA-GF 25	BLACK	1

THIS DRAWING IS A CONTROLLED DOCUMENT FOR TYCO ELECTRONICS CORPORATION. IT IS SUBJECT TO CHANGE VIA TEC CONTROLS THE ENGINEERING ORGANIZATION. SHOULD BE CONTACTED FOR THE LATEST REVISION.

DIMENSIONS: mm

TOLERANCES UNLESS OTHERWISE SPECIFIED:
0 PLC ±0.3
1 PLC ±0.3
2 PLC ±0.3
3 PLC ±-
4 PLC ±-
ANGLES ±2°

MATERIAL - -
FINISH - -

DWN 09JUL2001 A.Richter
CHK 10JUL2001 H.Schmitt
APVD -
PRODUCT SPEC 108-18688-1
APPLICATION SPEC 114-18334-1
WEIGHT -

Tyco Electronics AMP GmbH
D - 63225 Langen

NAME 18+4POS. AMPMODU II PIN HEADER
-
18+4pol. AMPMODU II Stiftwanne

SIZE	CAGE CODE	DRAWING NO	RESTRICTED TO
A1	00779	G-1355585	-

CUSTOMER DRAWING | SCALE 5:1 | SHEET 4 OF 4 | REV H1

Mouser Electronics

Authorized Distributor

Click to View Pricing, Inventory, Delivery & Lifecycle Information:

TE Connectivity:

1355585-3