THIS DRAWING IS A CONTROLLED DOCUMENT FOR TYCO ELECTRONICS CORPORATION
IT IS SUBJECT TO CHANGE AND THE CONTROLLING ENGINEERING ORGANIZATION
SHOULD BE CONTACTED FOR THE LATEST REVISION.

LOC	DIST
E	B

REVISIONS

P	LTR	DESCRIPTION	DATE	DWN	APVD
	BA	NEW RELEASE	11-MAY-09	SM	St.P

FOR FURTHER INFORMATION SEE DATA SHEET FOR
CRG SERIES-THICK FILM CHIP RESISTORS

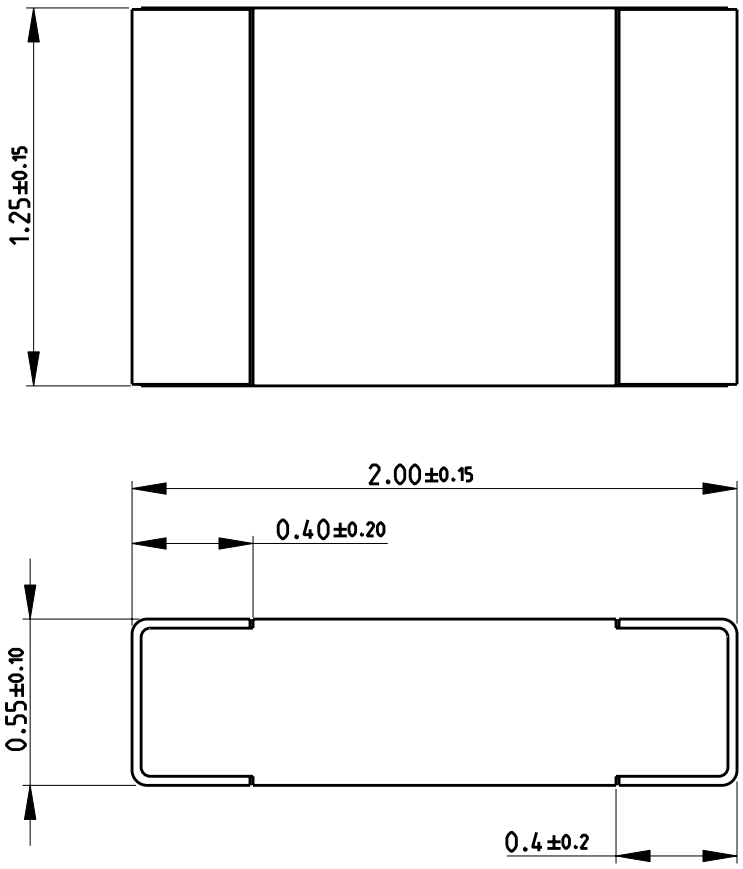

RoHS Compliant

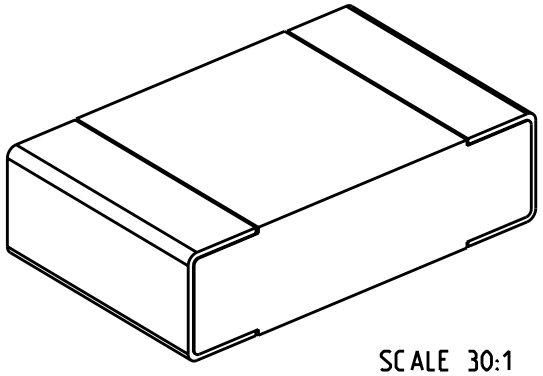

SCALE 30:1

THIS DRAWING IS UNPUBLISHED. © COPYRIGHT 2009 BY TYCO ELECTRONICS CORPORATION. ALL RIGHTS RESERVED.
RELEASED FOR PUBLICATION 2009

DIMENSIONS: mm

TOLERANCES UNLESS OTHERWISE SPECIFIED:

0 PLC	±0.5
1 PLC	±0.2
2 PLC	±0.1
3 PLC	±-
4 PLC	±-
ANGLES	±5°

DWN	SUBHASH.M	11-MAY-09
CHK	PRAKASH.S	11-MAY-09
APVD	STEPHEN.P	11-MAY-09

PRODUCT SPEC: -

APPLICATION SPEC: -

WEIGHT: -

MATERIAL: -

FINISH: -

Tyco Electronics

Tyco Electronics Corporation
Dorcan, Swindon, SN3 5HH

NAME: THICK FILM CHIP RESISTORS SERIES CRG 0805

SIZE	CAGE CODE	DRAWING NO	RESTRICTED TO
A4	00779	C-1623251	-

CUSTOMER DRAWING

SCALE 40:1 SHEET 1 OF 1 REV BA

AMP 1469-35 REV 31MAR2000

Pro/ENGINEER DRAWING

Mouser Electronics

Authorized Distributor

Click to View Pricing, Inventory, Delivery & Lifecycle Information:

TE Connectivity:
CRG0805F560K