THIS DRAWING IS UNPUBLISHED. RELEASED FOR PUBLICATION -,- .
© COPYRIGHT 2011 BY TYCO ELECTRONICS CORPORATION. ALL RIGHTS RESERVED.

LOC	DIST
DW	—

REVISIONS

P	LTR	DESCRIPTION	DATE	DWN	APVD
	A	REVISED (ECR-10-026339)	23MAY'11	J.C.	W.K.

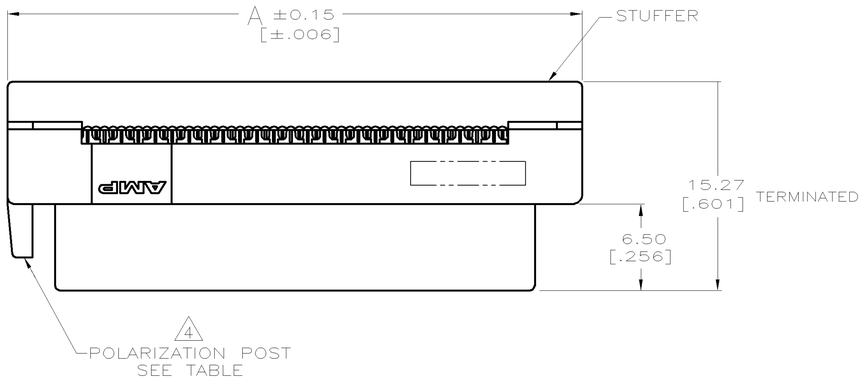

1. HOUSING AND COVER– POLYESTER, BLACK, 94V–0.
2. CONNECTOR WILL TERMINATE .63 [.025] CENTERLINE FLAT RIBBON CABLE, #30 AWG SOLID,PVC INSULATION.
3. DIMENSIONS SHOWN ARE MAXIMUM UNLESS OTHERWISE SPECIFIED.
4. REQUIRED FOR POLARIZATION OF RIBBON CABLE EDGE CONNECTOR TO P.C. BOARD.
5. CONNECTOR WILL ACCOMODATE PRINTED CIRCUIT BOARD THICKNESS OF 1.42–1.72 [.056–.068].
6. ALL P/NS ARE PACKAGED IN TUBES, THEY ARE THE SAME PRODUCT AS 787693–2, –4, –5, –3, –6, –1 RESPECTIVELY, WHICH ARE PACKAGED IN TRAYS.
7. TERMINALS–PHOSPHOR BRONZE WITH GOLD FLASH OVER 0.76μm [.000030] MINIMUM PALLADIUM–NICKEL IN CONTACT AREA AND 3.81μm [.000150] MINIMUM TIN ON TERMINATING AREA, ALL OVER 1.27μm [.000050] MINIMUM NICKEL.
8. LEAD CONTENT: 1000 PPM UNDER.
9. ALL DIMENSIONS SHOWN ARE MAXIMUM UNLESS OTHERWISE SPECIFIED.

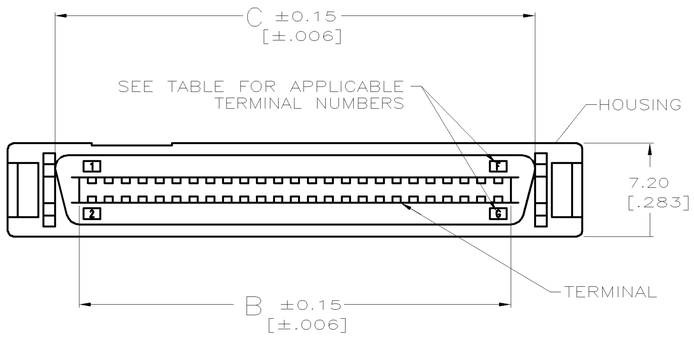

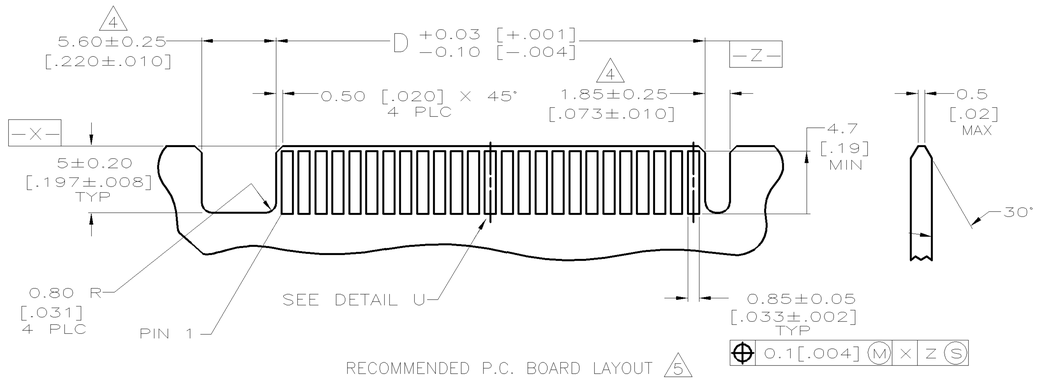

G	F	D	C	B	A	NO OF POSN	PART NUMBER
100	99	63.93 [2.517]	67.77 [2.668]	64.13 [2.525]	74.85 [2.947]	100	1–1734098–0
80	79	51.23 [2.017]	55.07 [2.168]	51.43 [2.025]	62.15 [2.447]	80	1734098–8
68	67	43.61 [1.717]	47.45 [1.868]	43.81 [1.725]	54.53 [2.147]	68	1734098–7
60	59	38.53 [1.517]	42.37 [1.668]	38.73 [1.525]	49.45 [1.947]	60	1734098–6
50	49	32.18 [1.267]	36.02 [1.418]	32.38 [1.275]	43.10 [1.697]	50	1734098–5
40	39	25.70 [1.012]	29.67 [1.168]	26.03 [1.025]	36.75 [1.447]	40	1734098–4

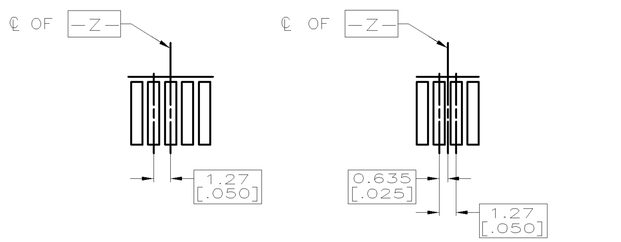

DETAIL U

THIS DRAWING IS A CONTROLLED DOCUMENT.

DIMENSIONS: mm

TOLERANCES UNLESS OTHERWISE SPECIFIED:
0 PLC ±–
1 PLC ±–
2 PLC ±–
3 PLC ±–
4 PLC ±–
ANGLES ±–
9

MATERIAL: SEE NOTE
FINISH: SEE NOTE

DWN O. HU 26MAR2004
CHK S. HOU 26MAR2004
APVD T. KE 26MAR2004
PRODUCT SPEC 108–57896
APPLICATION SPEC —
WEIGHT —

TE Connectivity

NAME: RCPT, ASSY, RIBBON CABLE, .025CL, CHAMP .050, SERIES I

SIZE A3 | CAGE CODE 00779 | DRAWING NO C–1734098 | RESTRICTED TO —

CUSTOMER DRAWING | SCALE — | SHEET 1 OF 2 | REV A

THIS DRAWING IS UNPUBLISHED. RELEASED FOR PUBLICATION -,- .
© COPYRIGHT 2011 BY TYCO ELECTRONICS CORPORATION. ALL RIGHTS RESERVED.

LOC	DIST
DW	—

REVISIONS

P	LTR	DESCRIPTION	DATE	DWN	APVD
		SEE SHEET 1.			

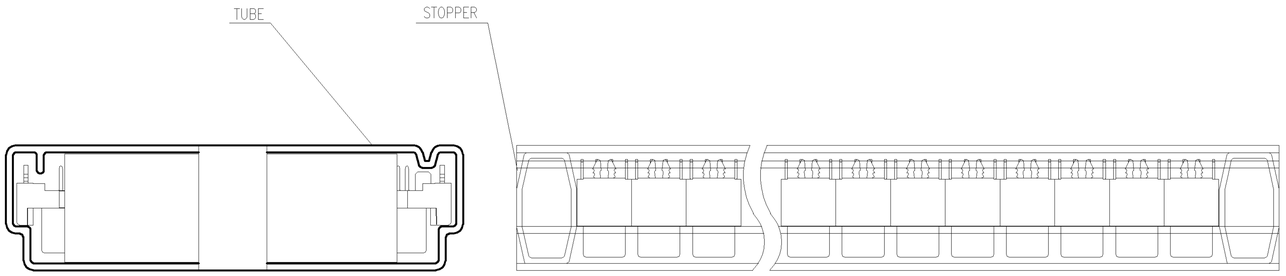

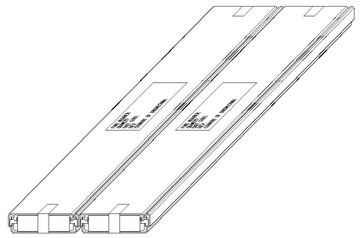

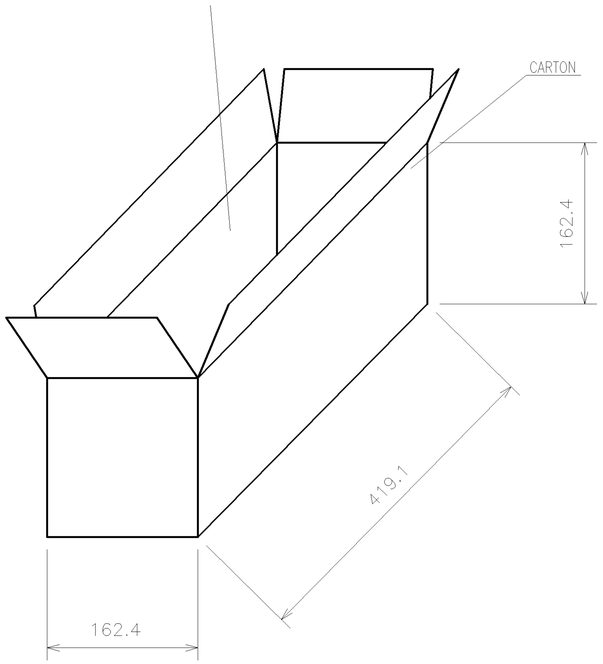

POS.	Q'TY/ TUBE	TUBE/ BOX	Q'TY/ BOX	N/W (KG)	G/W (KG)	PART NUMBER
100	50	6	300	2.67	3.62	1-1734098-0
80	50	12	600	4.44	5.84	1734098-8
68	50	12	600	3.84	5.27	1734098-7
60	50	12	600	3.46	4.72	1734098-6
50	50	12	600	2.94	4.10	1734098-5
40	50	18	900	3.69	5.10	1734098-4

THIS DRAWING IS A CONTROLLED DOCUMENT.

DIMENSIONS: mm

TOLERANCES UNLESS OTHERWISE SPECIFIED:
0 PLC ± –
1 PLC ± –
2 PLC ± –
3 PLC ± –
4 PLC ± –
ANGLES ± –

MATERIAL –

FINISH –

DWN –
CHK –
APVD –
PRODUCT SPEC –
APPLICATION SPEC –
WEIGHT –

TE Connectivity

NAME
RCPT, ASSY, RIBBON CABLE, .025CL, CHAMP .050, SERIES I

SIZE	CAGE CODE	DRAWING NO	RESTRICTED TO
A3	00779	C-1734098	—

CUSTOMER DRAWING

SCALE	SHEET	REV
—	2 OF 2	A

Mouser Electronics

Authorized Distributor

Click to View Pricing, Inventory, Delivery & Lifecycle Information:

TE Connectivity:

1734098-6