AMPHENOL PART NUMBER	ATTENUATION (NOTE 2)
954–130–5101	1.0 ± 0.5 dB
954–130–5102	2.0 ± 0.5 dB
954–130–5103	3.0 ± 0.5 dB
954–130–5104	4.0 ± 0.5 dB
954–130–5105	5.0 ± 0.5 dB
954–130–5106	6.0 ± 0.6 dB
954–130–5107	7.0 ± 0.7 dB
954–130–5108	8.0 ± 0.8 dB
954–130–5109	9.0 ± 0.9 dB
954–130–5110	10.0 ± 1.0 dB
954–130–5111	11.0 ± 1.1 dB
954–130–5112	12.0 ± 1.2 dB
954–130–5113	13.0 ± 1.3 dB
954–130–5114	14.0 ± 1.4 dB
954–130–5115	15.0 ± 1.5 dB
954–130–5116	16.0 ± 1.6 dB
954–130–5117	17.0 ± 1.7 dB
954–130–5118	18.0 ± 1.8 dB
954–130–5119	19.0 ± 1.9 dB
954–130–5120	20.0 ± 2.0 dB

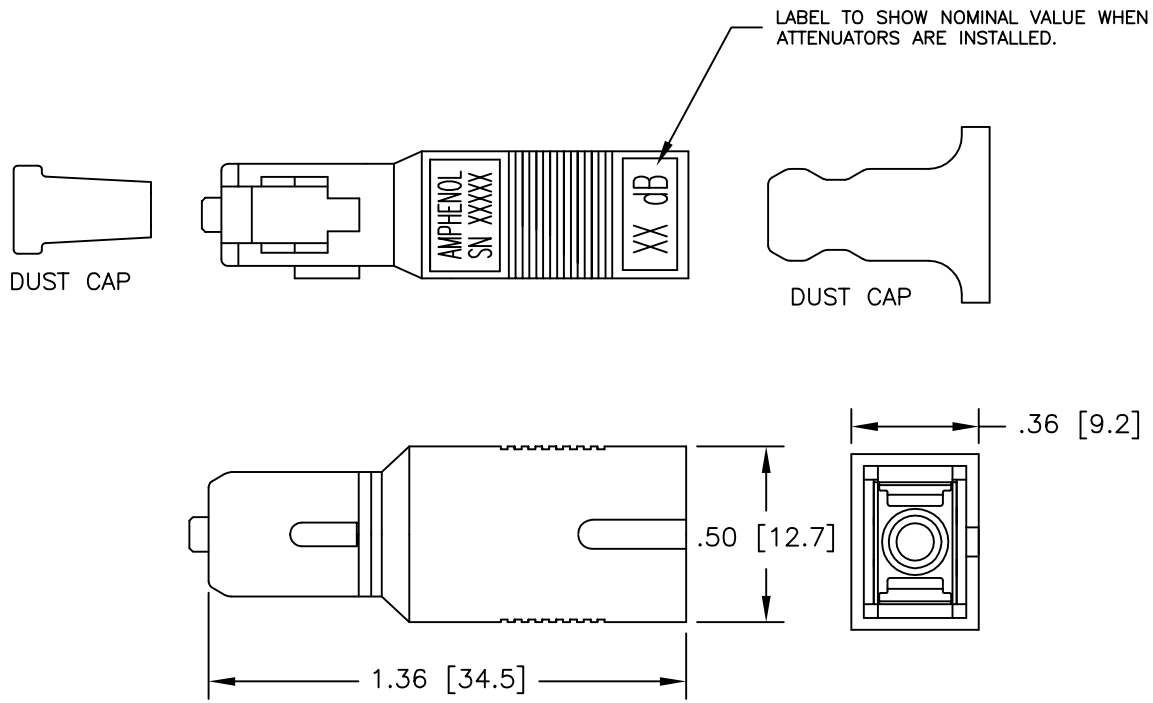

NOTES:

1. ALL DIMENSIONS ARE SHOWN IN INCHES[MILLIMETERS].
2. OPERATING WAVELENGTH: 1260–1360 AND 1430–1580 nm. ATTENUATION VALUES FOR DEVICES WHEN USED BETWEEN PATCH CORDS. WHEN USED AT A DETECTOR INTERFACE, CONSULT THE FACTORY FOR ATTENUATION VALUES.
3. BACKREFLECTION = <–55dB

REV.	DESCRIPTION	APVD	DATE	ECO No
B	CHANGE OPERATING WAVELENGTH. UPDATE DRAWING FORMAT.	TLW	07/09/07	E07–0219
A	FIRST ISSUE	DSR	2/2/01	-----

UNLESS OTHERWISE SPECIFIED TOLERANCE TO BE
LINEAR: X.X ± .1; X.XX ± 0.01; X.XXX ± 0.003
ANGULAR: X° ± 1°; X°X' ± 30'; X°X'X" ± 15'
BREAK ALL SHARP EDGES AND REMOVE ALL BURRS
DO NOT SCALE
DIMENSIONS IN INCHES — THIRD ANGLE PROJECTION

NOTICE – These drawings, specifications, or other data (1) are remain the property of Amphenol Corporation. (2) must be returned upon request; and (3) are confidential and are not to be disclosed to any person other than those to whom they are given by Amphenol Corporation, or by any other person to anyone for any purpose is not to be regarded by implication or otherwise as in any manner licensing, granting rights or permitting such holder or any other person to manufacture, use or sell any products, process or design, patented or otherwise, that may in any way be related to or disclosed by said drawings, specifications or other data.

MATL:
FINISH:
REF.:
DRN: T. BARKER — DATE: 2/2/01
CKD: — DATE:
APVD: — DATE:
SCALE: NTS
PART No: 954-130-51XX
SIZE: B

TITLE: ATTENUATOR, SC/UPC PLUG STYLE

Amphenol
FIBER OPTIC PRODUCTS
1925A Ohio Street, Lisle, IL60532, USA

DRAWING NO. 954-130-51XX
SHEET 1 OF 1

Mouser Electronics

Authorized Distributor

Click to View Pricing, Inventory, Delivery & Lifecycle Information:

Amphenol:

954-130-5110 954-130-5104 954-130-5105 954-130-5103