THIS DRAWING IS UNPUBLISHED. RELEASED FOR PUBLICATION 20
© COPYRIGHT 20 BY - ALL RIGHTS RESERVED.

LOC	DIST
DY	-

REVISIONS

P	LTR	DESCRIPTION	DATE	DWN	APVD
	E3	REVISED PER ECR-13-003471	25FEB13	RW	SY

NOTES:

1. MATERIAL:
   HOUSING: GLASS FILLED PBT, NATURAL COLOR (WHITE)
   CONTACT: PHOSPHOR BRONZE
2. FINISH: MATTE TIN OVER NICKEL UNDERPLATE
3. KINK CONTACTS LOCATION:
   8P & BELOW: ALL POSITIONS
   9P & ABOVE: 4 CONTACTS (2 PAIRS) EACH END
4. PACKAGING: TUBE

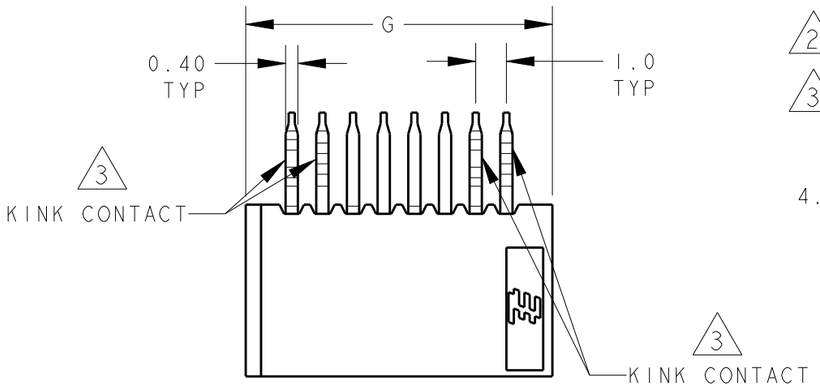

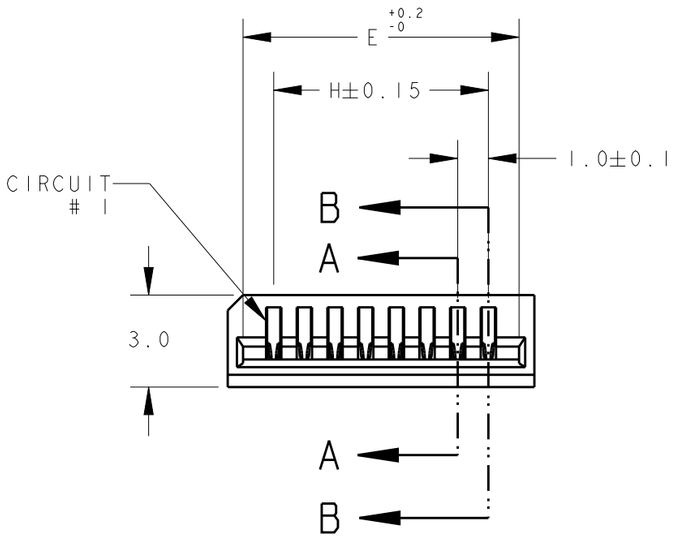

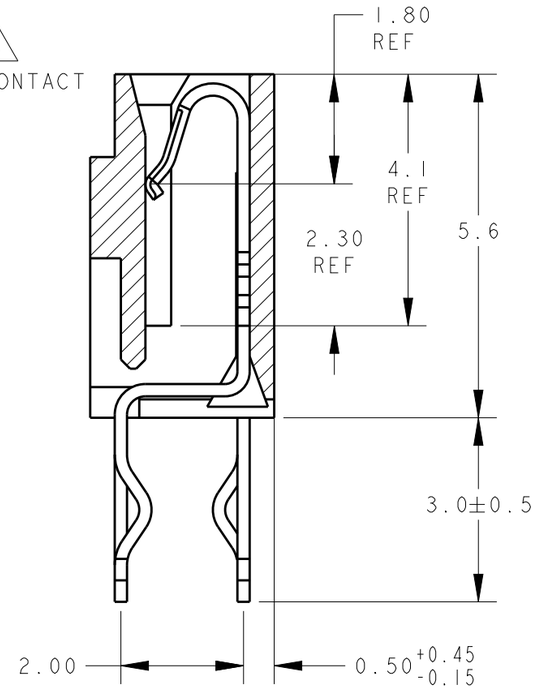

SECTION A-A
(FOR ODD POSITION CONTACTS)
SCALE 10:1

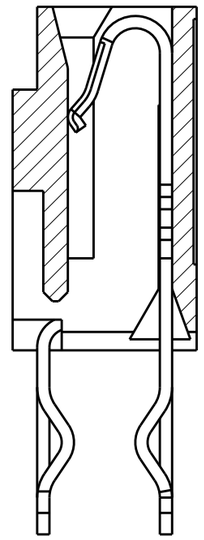

SECTION B-B
(FOR EVEN POSITION CONTACTS)
SCALE 10:1

H	G	F	E	POS.	PART NO.
29.00	32.00	31.00	31.00	30	3-84984-0
28.00	31.00	30.00	30.00	29	2- △ -9
27.00	30.00	29.00	29.00	28	2- -8
26.00	29.00	28.00	28.00	27	2- -7
25.00	28.00	27.00	27.00	26	2- -6
24.00	27.00	26.00	26.00	25	2- -5
23.00	26.00	25.00	25.00	24	2- -4
22.00	25.00	24.00	24.00	23	2- -3
21.00	24.00	23.00	23.00	22	2- -2
20.00	23.00	22.00	22.00	21	2- -1
19.00	22.00	21.00	21.00	20	2-84984-0
18.00	21.00	20.00	20.00	19	1- △ -9
17.00	20.00	19.00	19.00	18	1- -8
16.00	19.00	18.00	18.00	17	1- -7
15.00	18.00	17.00	17.00	16	1- -6
14.00	17.00	16.00	16.00	15	1- -5
13.00	16.00	15.00	15.00	14	1- -4
12.00	15.00	14.00	14.00	13	1- -3
11.00	14.00	13.00	13.00	12	1- -2
10.00	13.00	12.00	12.00	11	1- -1
9.00	12.00	11.00	11.00	10	1-84984-0
8.00	11.00	10.00	10.00	9	△ -9
7.00	10.00	9.00	9.00	8	-8
6.00	9.00	8.00	8.00	7	-7
5.00	8.00	7.00	7.00	6	-6
4.00	7.00	6.00	6.00	5	-5
3.00	6.00	5.00	5.00	4	84984-4

THIS DRAWING IS A CONTROLLED DOCUMENT.

DIMENSIONS: mm

TOLERANCES UNLESS OTHERWISE SPECIFIED:

0 PLC	±0.30
1 PLC	±0.30
2 PLC	±0.30
3 PLC	±-
4 PLC	±-
ANGLES	±3°

MATERIAL - 1

FINISH 2

DWN	WYLEE	15JUN04
CHK	LP TAN	22NOV2011
APVD	SF LEONG	22NOV2011

PRODUCT SPEC: 108-51058

APPLICATION SPEC: -

WEIGHT: -

TE Connectivity

NAME: ASSY, 1.00mm FFC CONN DIP, V

SIZE	CAGE CODE	DRAWING NO	RESTRICTED TO
A3	00779	C-84984	-

Customer Drawing

SCALE	SHEET	OF	REV
5:1	1	2	E3

THIS DRAWING IS UNPUBLISHED. RELEASED FOR PUBLICATION 20
© COPYRIGHT 20 BY - ALL RIGHTS RESERVED.

LOC	DIST
DY	-

REVISIONS

P	LTR	DESCRIPTION	DATE	DWN	APVD
		SEE SHEET 1			

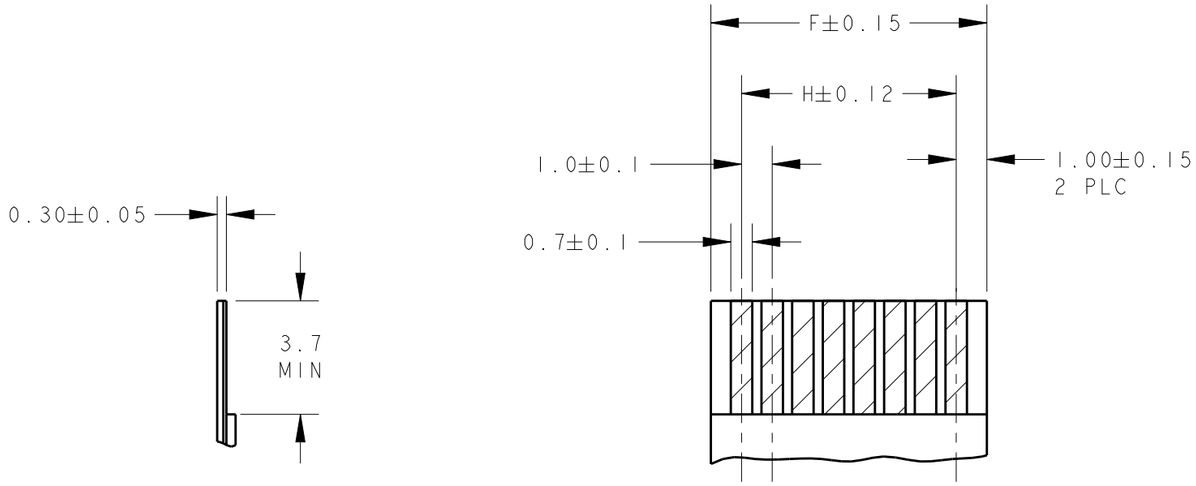

RECOMMENDED FFC/FPC

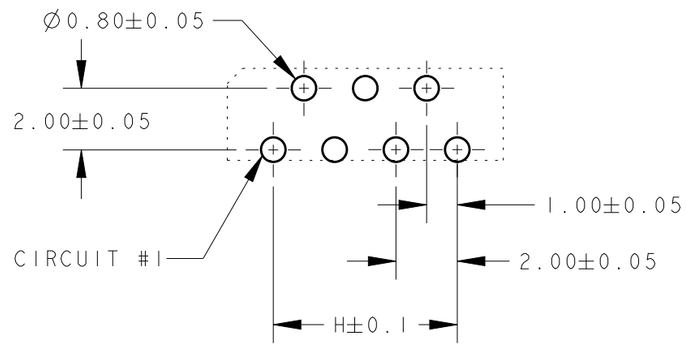

RECOMMENDED PCB LAYOUT (THK= 1.6±0.1)
(FOR ODD POSITION CONNECTORS)
NON-ACCUMULATIVE TOLERANCE

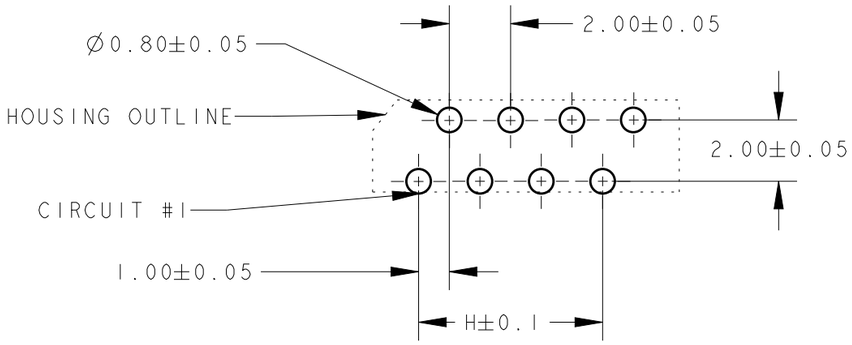

RECOMMENDED PCB LAYOUT (THK= 1.6±0.1)
(FOR EVEN POSITION CONNECTORS)
NON-ACCUMULATIVE TOLERANCE

THIS DRAWING IS A CONTROLLED DOCUMENT.

DIMENSIONS: mm

TOLERANCES UNLESS OTHERWISE SPECIFIED:

0 PLC	±0.30
1 PLC	±0.30
2 PLC	±0.30
3 PLC	±-
4 PLC	±-
ANGLES	±3°

MATERIAL - 1

FINISH - 2

DWN	WYLEE	15JUN04
CHK	LP TAN	22NOV2011
APVD	SF LEONG	22NOV2011

PRODUCT SPEC: 108-51058

APPLICATION SPEC: -

WEIGHT: -

TE Connectivity

NAME: ASSY, 1.00mm FFC CONN DIP, V

SIZE	CAGE CODE	DRAWING NO	RESTRICTED TO
A3	00779	C-84984	-

Customer Drawing

SCALE 5:1 SHEET 2 OF 2 REV E3

Mouser Electronics

Authorized Distributor

Click to View Pricing, Inventory, Delivery & Lifecycle Information:

TE Connectivity:

1-84984-5