Part Number: 0358431245
Status: Active
Overview: Automotive Bulb Sockets
Description: PT Bulb Socket Single Housing Assembly, Type D, P21W, Sealed, Gray

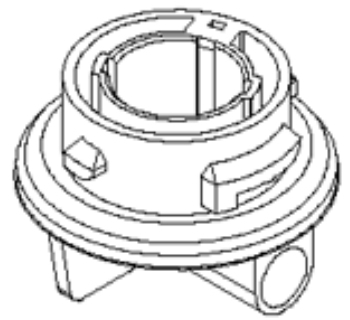

Series image - Reference only

Documents:
3D Model
Drawing (PDF)
Packaging Specification PK-35843-001-001 (PDF)
RoHS Certificate of Compliance (PDF)

General

Product Family	Other Sockets
Series	35843
Comments	D-Type
Component Type	Socket
Overview	Automotive Bulb Sockets
Product Name	PT Bulb Socket
UPC	756054270066

Physical

Circuits (Loaded)	2
Circuits (maximum)	2
Color - Resin	Gray
Durability (mating cycles max)	Contact Molex
Entry Angle	Vertical
Keying to Mating Part	None
Material - Resin	Nylon
Net Weight	9.586/g
PCB Locator	No
PCB Retention	N/A
Packaging Type	Bag
Pitch - Mating Interface	N/A
Temperature Range - Operating	-40° to +85°C
Termination Interface: Style	Through Hole

Electrical

Current - Maximum per Contact	7.0A
Voltage - Maximum	12V

Material Info

Reference - Drawing Numbers

Packaging Specification	PK-35843-001-001
Sales Drawing	SD-35843-004

EU ELV
Compliant

EU RoHS
Compliant

China RoHS

REACH SVHC
Not Contained Per -ED/01/2018 (15 January 2018)

Halogen-Free Status
Low-Halogen

Need more information on product environmental compliance?

Email productcompliance@molex.com
Please visit the Contact Us section for any non-product compliance questions.

China ROHS	Not Relevant
ELV	Compliant
Prop65	Compliant
RoHS Phthalates	Not Contained

Search Parts in this Series
35843 Series

Mates With
Bayonet Base Bulb

Use With
Positive Terminal for PT Bulb Socket 35464-8000
Earth Terminal for PT Bulb Socket 35465-8000
Positive Wire Seal 35903-0096
Earth Wire Seal 35903-0106

Mouser Electronics

Authorized Distributor

Click to View Pricing, Inventory, Delivery & Lifecycle Information:

Molex:
35843-1245