DO NOT SCALE

PART NO. 1211 0490

PART NO. 1211 0490

DATE	SYM	REVISION RECORD	AUTHORITY	DR	CK
19N090	C	WAS PE024165 & RELEASED	900005	JC	JC
19N090	D	REVISED GRAPHICS & DIMENSIONS	138248	JC	JC
04SE91	E	ADDED TWO STRESS RELIEF FEATURES			
		& ANTI SLIDE MECHANISM	144306	DJP	DJP
04SE91	F	REVISED	144307	DJP	DJP
25SE91	G	ADDED BUMPS -4 PLCS	144838	DJP	DJP
16OC91	H	MAT'L SPEC WAS HYTREL 8236 - BLACK	144884	BKD	BKD
30JA92	J	ADDED CPA GUIDE RAILS AND REVISED	147015	BKD	BKD
15JL92	K	REVISED	150078	BAR	BAR
29OC93	K2	REVISED NOTES	157807	HH	HH
17AP07	K3	MAT'L SPEC WAS R0071746, REVISED			
		TOLS 51.00 +0.15/−0.30 WAS 51.00			
		+/−0.15 & 33.75 +0.15/−0.20 WAS			
		33.75 +/−0.15	401150	JTZ	JVM
13DE07	K4	ADDED DIM (1 PLC) AND			
		75.2 REF WAS 75.2 +/-0.3	403269	JTV	AUG
24MR09	K5	ADDED NOTE 8	407586	MGC	MJF

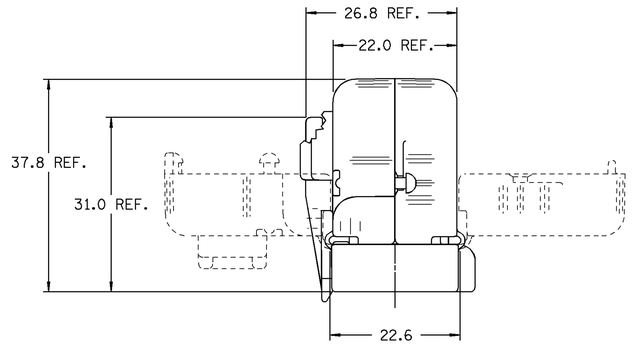

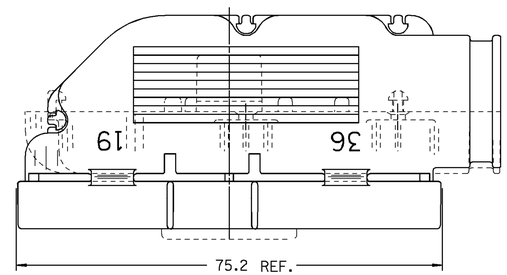

STRAIN RELIEF SHOWN
IN ASSEMBLED POSITION

CENTERLINE MEASUREMENTS
TO BE TAKEN FROM DATUM
-A- AT 3.00 MM PROGRESSIONS
ALLOWABLE TOLERANCE AS SHOWN

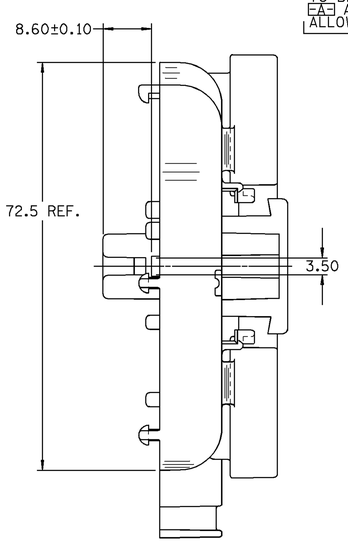

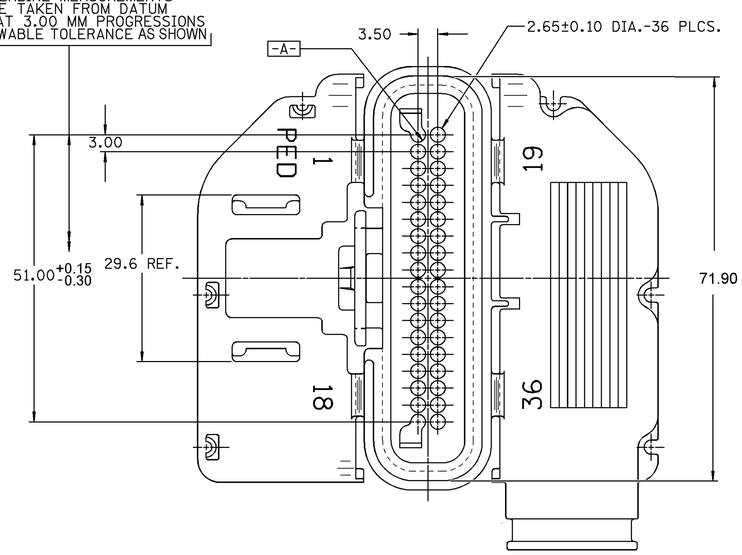

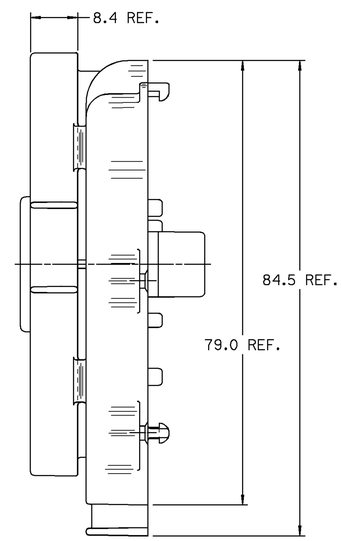

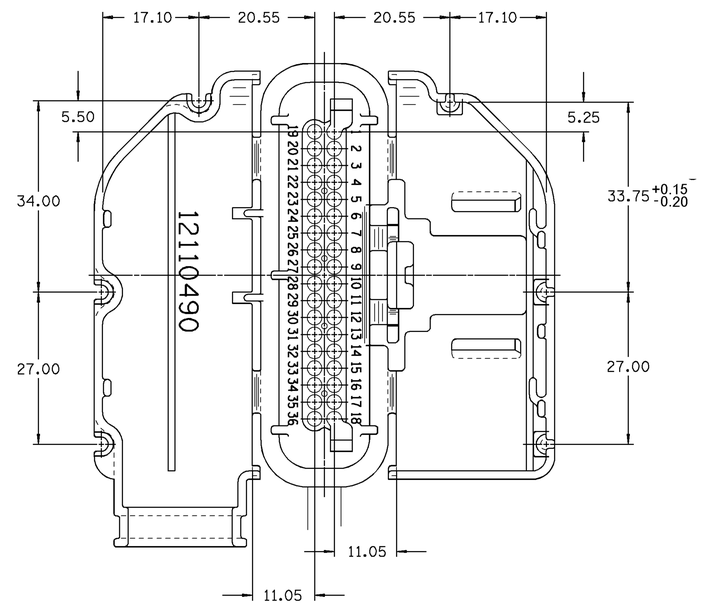

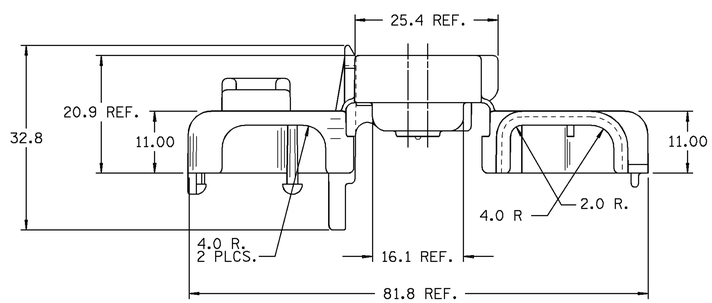

NOTES —
1. THIS PART ACCEPTS 12084912 TERMINAL OR EQUIVALENT.
2. MATING FEMALE CONNECTOR 12110487 OR EQUIVALENT.
3. THIS PART ACCEPTS 12110489 SEAL OR EQUIVALENT.
4. THIS PART ALSO USED WITH RETAINER 12110488 ,CAVITY PLUG(S) 12129557, C.P.A. 12110299 AND WHEN FULLY ASSEMBLED MATES TO HEADER CONNECTOR ASSEMBLY 12110485 OR EQUIVALENTS.
5. ENVIRONMENTAL SEAL CLASS CODE 3.
6. DIMENSIONS MARKED "REF." ARE FOR REFERENCE ONLY AND NO TOLERANCE LIMITS ARE ESTABLISHED.
7. CRIMP WING DIMENSIONS AFTER CRIMPING MAY NOT EXCEED 2.55 MM DIAMETER. MAX CABLE O.D. 2.42 MM. REFER TO ESA-605 FOR CRIMP DIMENSIONS.
8. THIS CONNECTION SYSTEM DOES NOT MEET 75N MAX ERGONOMIC STANDARD.

PACKARD ELECTRIC DIVISION
GENERAL MOTORS CORPORATION
WARREN, OHIO

PED/INTERGRAPH EMS

FILE SPEC: ****USER**** DGN&SPECIFICATION********** *****SYTIME******

THIRD ANGLE PROJECTION

METRIC
DIMENSIONS ARE IN MILLIMETERS UNLESS OTHERWISE SPECIFIED.

CODE NO. 6900

Q.C.

TOLERANCE UNLESS OTHERWISE SPECIFIED
DECIMAL: ONE PLACE ± 0.3 TWO PLACE ± 0.15 ANGULAR ±2°

DWG. DATE 06MR90 SCALE NONE

DR. J.COLDSNOW 19N090

EST. NO.

CK. J.COLDSNOW DATE 19N090

REFERENCE NO. 12110490 "R6" SIZE

APPR. CHRIS REIDER DATE 30N090

APPR. R.J. POLEHONKI DATE 30N090

MATERIAL SPEC. THERMOPLASTIC ELASTOMER

NAME STRAIN RLF 36F MIC/P 100W RH 90DEG

PART NO. 1211 0490 OUTLINE DRAWING

SIZE D

PACKARD ELECTRIC

Mouser Electronics

Authorized Distributor

Click to View Pricing, Inventory, Delivery & Lifecycle Information:

Aptiv:
12110490