THIS DRAWING IS UNPUBLISHED. RELEASED FOR PUBLICATION 20
© COPYRIGHT 20 BY - ALL RIGHTS RESERVED.

LOC	DIST
GP	00

REVISIONS

P	LTR	DESCRIPTION	DATE	DWN	APVD
	A	NEW RELEASE	13FEB2012	BM	DO

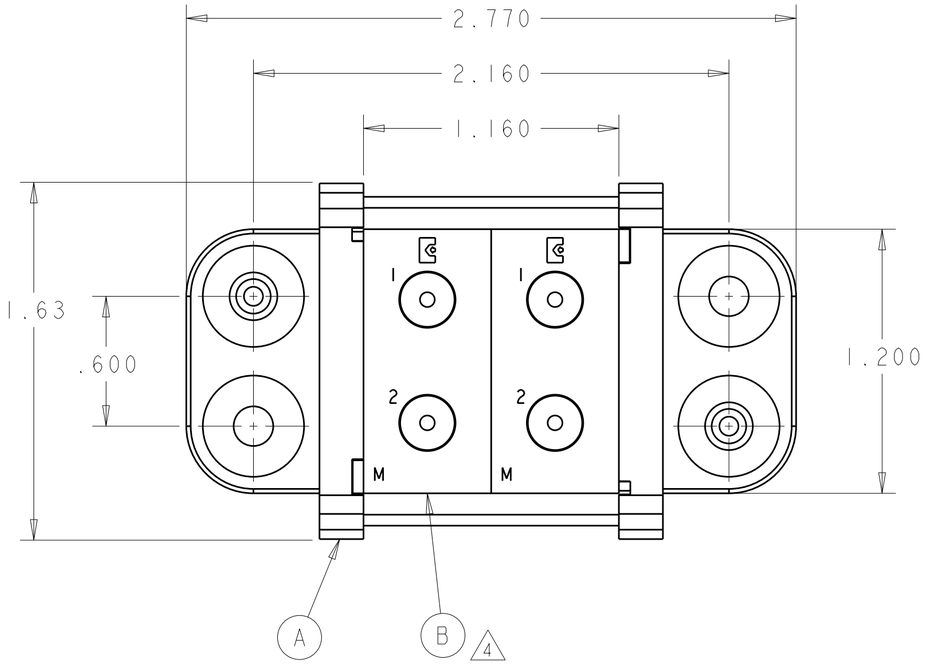

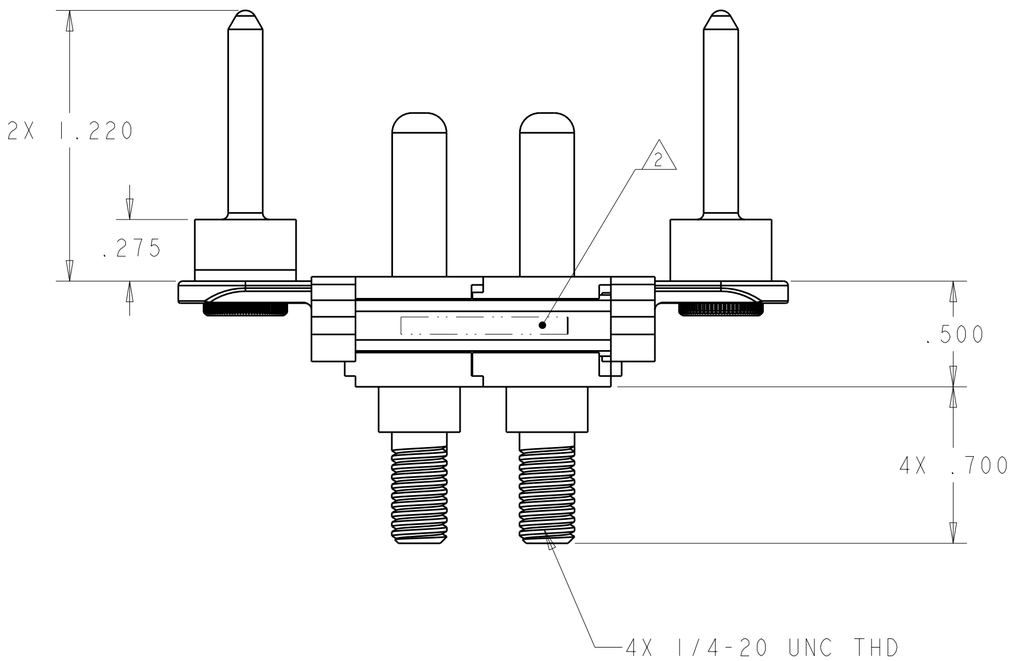

1. PART NUMBER CHANGES AND/OR DESIGN CHANGES AFFECTING ITEM INTERCHANGEABILITY REQUIRE PRIOR TYCO ELECTRONICS APPROVAL AND AUTHORIZATION BY REVISION TO THIS DRAWING.

2. ITEMS PROVIDED TO THIS SPECIFICATION TO BE PERMANENTLY IDENTIFIED PER THE FLOOWING IDENTIFIER:

TYCO ELECTRONICS P/N XXXXXXX-X

DATE CODE (e.g. 0212) YEAR WEEK XXXX

3. MOUNTING FLANGE BUSHING ACCEPTS 6/32 SCREW (Ø.156 CLEARANCE HOLE, FLOAT MOUNT) OR 8/32 SCREWS (Ø.173 CLEARANCE HOLE FIXED MOUNT) USER SUPPLIED.

4. MODULE "M" PIN IS INSTALLED

2	6648499-1	MODULE "M"	B
2	6648259-1	END CAP, PANEL MOUNT	A
-1	PART NUMBER	DESCRIPTION	ITEM NO.

THIS DRAWING IS A CONTROLLED DOCUMENT.

DIMENSIONS: INCHES

TOLERANCES UNLESS OTHERWISE SPECIFIED:
0 PLC ±0
1 PLC ±0
2 PLC ±.02
3 PLC ±.010
4 PLC ±-
ANGLES ±-

MATERIAL -
FINISH -

DWN B.MATTHEWS 13FEB2012
CHK D.ORRIS 13FEB2012
APVD S.FLICKINGER 13FEB2012
PRODUCT SPEC -
APPLICATION SPEC -
WEIGHT -

TE Connectivity

NAME PIN CONNECTOR DOMINO W/ PANEL CUT-OUT

SIZE A2 | CAGE CODE 00779 | DRAWING NO C-2085996 | RESTRICTED TO -

CUSTOMER DRAWING | SCALE 2:1 | SHEET 1 OF 2 | REV A

ELCON | DOMINO

1471-9 (3/11)

Pro/ENGINEER DRAWING

THIS DRAWING IS UNPUBLISHED. RELEASED FOR PUBLICATION 20
© COPYRIGHT 20 BY - ALL RIGHTS RESERVED.

LOC	DIST
GP	00

REVISIONS

P	LTR	DESCRIPTION	DATE	DWN	APVD
	-	SEE SHEET 1	-	-	-

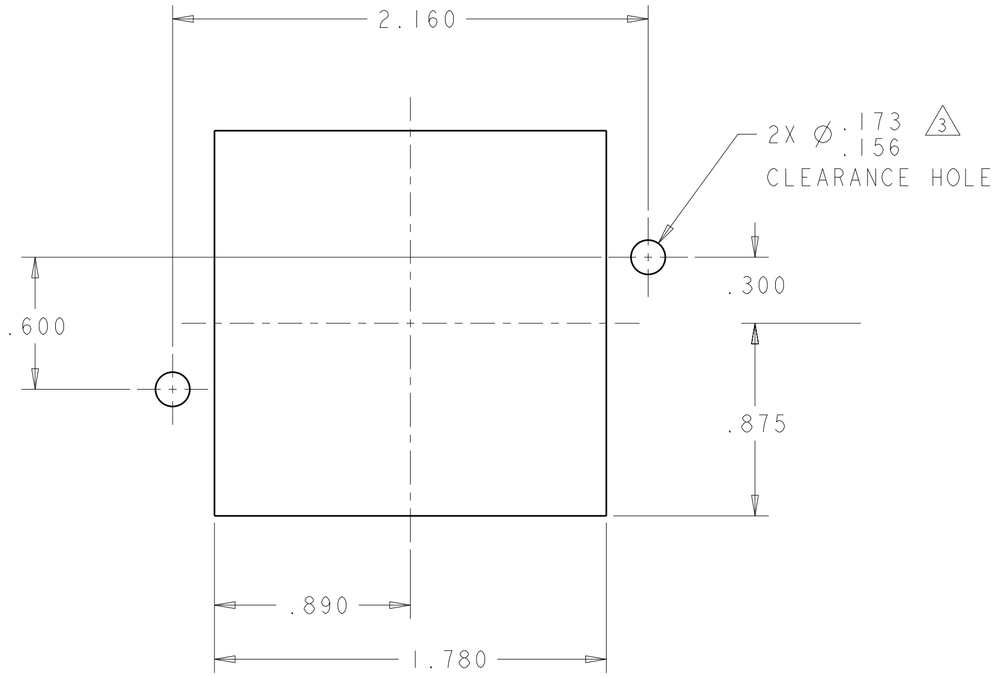

PANEL CUT-OUT
COMPONENT SIDE

ELCON	DOMINO

THIS DRAWING IS A CONTROLLED DOCUMENT.

DIMENSIONS: INCHES

TOLERANCES UNLESS OTHERWISE SPECIFIED:

0 PLC	±0
1 PLC	±0
2 PLC	±.02
3 PLC	±.010
4 PLC	±-
ANGLES	±-

MATERIAL -

FINISH -

DWN B.MATTHEWS 13FEB2012
CHK D.ORRIS 13FEB2012
APVD S.FLICKINGER 13FEB2012

PRODUCT SPEC -

APPLICATION SPEC -

WEIGHT -

TE Connectivity

NAME PIN CONNECTOR DOMINO W/ PANEL CUT-OUT

SIZE	CAGE CODE	DRAWING NO	RESTRICTED TO
A2	00779	C-2085996	-

CUSTOMER DRAWING | SCALE 2:1 | SHEET 2 OF 2 | REV A

1471-9 (3/11)

Mouser Electronics

Authorized Distributor

Click to View Pricing, Inventory, Delivery & Lifecycle Information:

TE Connectivity:

2085996-1