THIS DRAWING IS UNPUBLISHED. | RELEASED FOR PUBLICATION -

© COPYRIGHT copyright_date BY - ALL RIGHTS RESERVED.

LOC A1 | DIST -

REVISIONS					
P	LTR	DESCRIPTION	DATE	DWN	APVD
	B5	ECR-15-012070	13AUG2015	JJH	BK
	B6	ECR-15-017291	02DEC2015	JJH	JP
	B7	SERRATION VIEWS ARE ADDED	19MAY2017	JJH	JP
	B8	ADDED REFERENCE TO SMBT CRIMP HEIGHT	12JAN2018	JP	JP

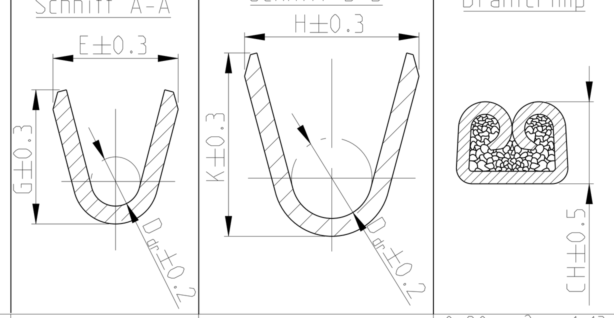

VERSION A

TE Connectivity ORDER - NO STRIP FORM Bandware (SERRATION DESIGN - 1)	REV	TE Connectivity ORDER - NO STRIP FORM Bandware (SERRATION DESIGN - 2)	REV	TE Connectivity ORDER - NO STRIP FORM Bandware (SERRATION DESIGN - 3)	REV	MATERIAL Werkstoff	SURFACE Oberflaeche	DGB WIRE RANGE (mm²)
-	-	-	-	-	-	-	-	0.2 - 0.5 FLK
-	-	-	-	-	-	-		
-	-	-	-	-	-	-	-	
-	-	927839-2	C	-	-	CuSn4	vorverzinnt PRETINNED	
-	-	927839-1	C	-	-	CuFe2		
-	-	-	-	927827-2	C	CuSn4	vorverzinnt PRETINNED	0.5 - 1.0 FLK
-	-	-	-	927827-1	C	CuFe2		
-	-	-	-	927833-5	D	CuFe2	⚠2	>1.0 - 2.5 FLK
-	-	-	-	927833-2	D	CuSn4	vorverzinnt PRETINNED	
-	-	-	-	927833-1	D	CuFe2		
927824-2	C	-	-	-	-	CuSn4	vorverzinnt PRETINNED	>2.5 - 4.0 FLK
927824-1	C	-	-	-	-	CuFe2		
(B8) ⚠13 963709-5	C	-	-	-	-	CuFe2	vorversilbert PRESILVERED ⚠2	4.0 - 6.0 FLK
-	-	-	-	-	-	-		
-	-	-	-	-	-	-	-	
(B8) ⚠13 963709-2	C	-	-	-	-	CuSn4	vorverzinnt PRETINNED	
(B8) ⚠13 963709-1	C	-		-	-	CuFe2		
-	-	-	-	-	-	-	-	
1241818-5	B	-	-	-	-	CuFe2	⚠2	
1241818-1	B	-	-	-	-	CuFe2	vorverzinnt PRETINNED	
-	-	927840-5	C	-	-	CuFe2	vorversilbert PRESILVERED ⚠2	0.2 - 0.5 FLR
-	-	927840-4	C	-	-	CuSn4		
-	-	-	-	-	-	-	-	
-	-	927840-2	C	-	-	CuSn4	vorverzinnt PRETINNED ⚠2	
-	-	927840-1	C	-	-	CuFe2		
-	-	-	-	1-927831-5	C	CuFe2	⚠1	0.5 - 1.0 FLR
-	-	-	-	927831-5	C	CuFe2	vorversilbert PRESILVERED	
-	-	-	-	927831-4	C	CuSn4		
-	-	-	-	-	-	-	-	
-	-	-	-	927831-2	C	CuSn4	vorverzinnt PRETINNED	
-	-	-	-	927831-1	C	CuFe2		
-	-	-	-	1-927837-5	D	CuFe2	⚠1	>1.0 - 2.5 FLR
-	-	-	-	927837-6	D	CuFe2	⚠4	
-	-	-	-	927837-5	D	CuFe2	vorversilbert PRESILVERED ⚠2	
-	-	-	-	927837-4	D	CuSn4		
-	-	-	-	-	-	-	-	
-	-	-	-	927837-2	D	CuSn4	vorverzinnt PRETINNED	
-	-	-	-	927837-1	D	CuFe2		
1-927829-5	D	-	-	-	-	CuFe2	⚠1	>2.5 - 4.0 FLR
927829-5	D	-	-	-	-	CuFe2	⚠2	
927829-2	D	-	-	-	-	CuSn4	vorverzinnt PRETINNED	
927829-1	D	-	-	-	-	CuFe2		

DGB WIRE RANGE (mm²)	WIRE CRIMP Drahtcrimp	INSUL-CRIMP Isol - crimp	CRIMP HEIGHT Crimp-Hoehe	APPLICATION TOOL Anschlag-WKZ	HAND TOOL Handzange	A	B	C	D	E	
0.2 - 0.5 FLK	E = 2.2, G = 2.2, D_{Dr} = 0.8	H = 3.7, K = 3.8, D_{Dr} = 2.0	0.20mm² = 1.13; 0.25mm² = 1.15; 0.35mm² = 1.19; 0.50mm² = 1.26	MQC- Applicator 878426-2	539635-1 WITH DIE: mit Matrize 539744-2	2.5	3.8	6.6	19.5	0.3	⚠8
0.5 - 1.0 FLK	E = 2.8, G = 3.0, D_{Dr} = 1.1	H = 4.5, K = 4.7, D_{Dr} = 2.4	0.5mm² = 1.38; 0.75mm² = 1.47; 1.0mm² = 1.56	MQC- Applicator 2-541689-2	539733-2 WITH DIE: mit Matrize 734249-0	3	4.2	5.8	19.5	0.4	
>1.0 - 2.5 FLK	E = 3.8, G = 4.1, D_{Dr} = 1.6	H = 5.7, K = 5.8, D_{Dr} = 3.6	1.5mm² = 1.76; 2.0mm² = 1.90; 2.5mm² = 2.04	MQC- Applicator 878367-2	539635-1 WITH DIE: mit Matrize 539733-2	3.5	4.7	6.3	19.5	0.4	
>2.5 - 4.0 FLK	E = 4.6, G = 4.8, D_{Dr} = 2.4	H = 6.3, K = 6.6, D_{Dr} = 4.0	3.0mm² = 2.13; 3.5mm² = 2.24; 4.0mm² = 2.35	MQC- Applicator 2-878314-2	539635-1 WITH DIE: mit Matrize 539734-2	4	5.2	6.8	19.5	0.6	
4.0 - 6.0 FLK	E = 5.2, G = 5.5, D_{Dr} = 2.9	H = 7.3, K = 7.6, D_{Dr} = 4.5	4.0mm² = 2.17; 5.0mm² = 2.36; 6.0mm² = 2.55	MQC- Applicator 2-878738-2	-	4.2	5.6	7.7	20 / 20.4	0.6	
0.2 - 0.5 FLR	E = 2.2, G = 2.2, D_{Dr} = 0.8	H = 2.8, K = 2.8, D_{Dr} = 1.4	0.2mm² = 1.13; 0.35mm² = 1.19; 0.5mm² = 1.26	MQC- Applicator 878427-2	-	2.5	3.8	6.4	19.5	0.3	⚠8
0.5 - 1.0 FLR	E = 2.8, G = 3.0, D_{Dr} = 1.1	H = 3.9, K = 4.1, D_{Dr} = 1.8	0.5mm² = 1.43; 0.75mm² = 1.52; 1.0mm² = 1.61	MQC- Applicator 878328-2	169400-0 WITH DIE: mit Matrize 734781-1	3	4.2	5.8	19.5	0.4	
>1.0 - 2.5 FLR	E = 3.8, G = 4.1, D_{Dr} = 1.6	H = 4.8, K = 4.9, D_{Dr} = 2.6	1.25mm² = 1.69; 1.5mm² = 1.76; 2.0mm² = 1.90; 2.5mm² = 2.04	MQC- Applicator 878356-2	169400-0 WITH DIE: mit Matrize 734251-0	3.5	4.7	6.3	19.5	0.4	
>2.5 - 4.0 FLR	E = 4.6, G = 4.8, D_{Dr} = 2.4	H = 5.5, K = 5.7, D_{Dr} = 3.3	3.0mm² = 2.13; 3.5mm² = 2.24; 4.0mm² = 2.35	MQC- Applicator 2-878384-2	169400-0 WITH DIE: mit Matrize 734251-0	4	5.2	6.8	19.5	0.6	

VERSION B

TE Connectivity ORDER - NO STRIP FORM Bandware (SERRATION DESIGN - 1)	REV	TE Connectivity ORDER - NO STRIP FORM Bandware (SERRATION DESIGN - 2)	REV	TE Connectivity ORDER - NO STRIP FORM Bandware (SERRATION DESIGN - 3)	REV	MATERIAL Werkstoff	SURFACE Oberflaeche	DGB WIRE RANGE (mm²)
-	-	-	-	2-927836-2	C	CuSn4	⚠5	0.5 - 1.0 FLR
-	-	-	-	-	-	-	-	
-	-	-	-	927836-2	C	CuSn4	vorverzinnt PRETINNED	
-	-	-	-	927836-1	C	CuFe2		
-	-	-	-	2-927835-2	C	CuSn4	⚠5	>1.0 - 2.5 FLR
-	-	-	-	2-927835-1	C	CuSn4	⚠6	
-	-	-	-	1-927835-3	C	CuFe2	⚠6	
-	-	-	-	-	-	-	-	
-	-	-	-	927835-2	C	CuSn4	vorverzinnt PRETINNED	
-	-	-	-	927835-1	C	CuFe2		
2-928966-2	D	-	-	-	-	CuSn4	⚠5	>2.5 - 4.0 FLR
2-928966-1	D	-	-	-	-	CuSn4	⚠6	
1-928966-3	D	-	-	-	-	CuFe2	⚠6	
-	-	-	-	-	-	-	-	
928966-2	D	-	-	-	-	CuSn4	vorverzinnt PRETINNED	
928966-1	D	-	-	-	-	CuFe2		
1241962-1	B	-	-	-	-	CuFe2	vorverzinnt PRETINNED	>3.0 - 5.0 FLR

DGB WIRE RANGE (mm²)	WIRE CRIMP Drahtcrimp	INSUL-CRIMP Isol - crimp	CRIMP HEIGHT Crimp-Hoehe	APPLICATION TOOL Anschlag-WKZ	HAND TOOL Handzange	A	B	C	D	E	SINGLE WIRE SEAL Einzeldichtung	DEAD END PLUG Blindstopfen
0.5 - 1.0 FLR	E = 2.8, G = 3.0, D_{Dr} = 1.1	H = 7.6, K = 7.7, D_{Dr} = 5.6	0.5mm² = 1.43; 0.75mm² = 1.52; 1.0mm² = 1.61	MQC- Applicator 878337-2	539635-1 WITH DIE: mit Matrize 739736-2	3	5.4	7.2	20	1.25	963243-1 963244-1	100132-1
>1.0 - 2.5 FLR	E = 3.8, G = 4.1, D_{Dr} = 1.6	H = 7.6, K = 7.7, D_{Dr} = 5.6	1.5mm² = 1.76; 2.0mm² = 1.90; 2.5mm² = 2.04	MQC- Applicator 878338-2	539635-1 WITH DIE: mit Matrize 539736-2	3.5	5.9	7.7	20	1.25	963244-1 963245-1	100132-1
>2.5 - 4.0 FLR	E = 4.6, G = 4.8, D_{Dr} = 2.4	H = 7.6, K = 7.7, D_{Dr} = 5.6	3.0mm² = 2.13; -; 4.0mm² = 2.35	MQC- Applicator 878441-2	539635-1 WITH DIE: mit Matrize 539736-2	4	5.9	7.7	20	1.25	963245-1	100132-1
>3.0 - 5.0 FLR	E = 4.8, G = 5.2, D_{Dr} = 2.5	H = 8.15, K = 7.8, D_{Dr} = 6.0	3.0mm² = 2.25; 4.0mm² = 2.50; 5.0mm² = 2.75	MQC- Applicator -	- WITH DIE: mit Matrize -	4	5.9	7.7	20	1.25	967011-1 963245-1	100132-1

SRTIP FORM / Bandware — CRIMP DIMENSIONS (mm) Crimpabmessungen (mm) — EXTRACTION TOOL Ausdrueckwerkzeug Nr.:726503-1 — TE CONNECTIVITY ORDER - No. ⚠7

VERSION A
(UNSEALED/ ungedichtet)

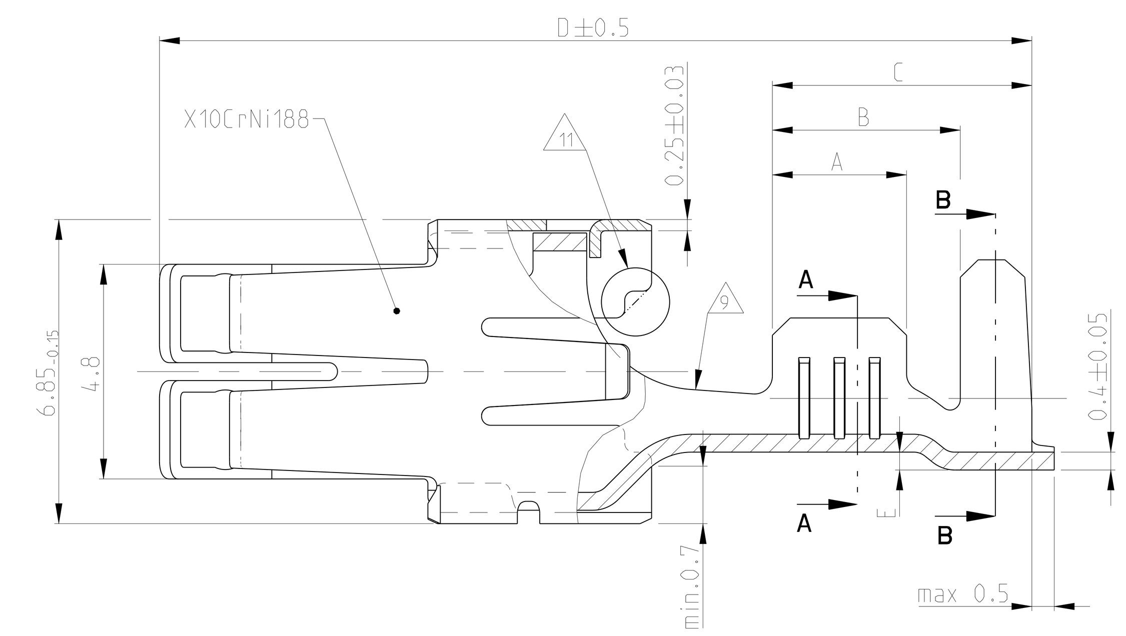

SERRATION DESIGN - 1

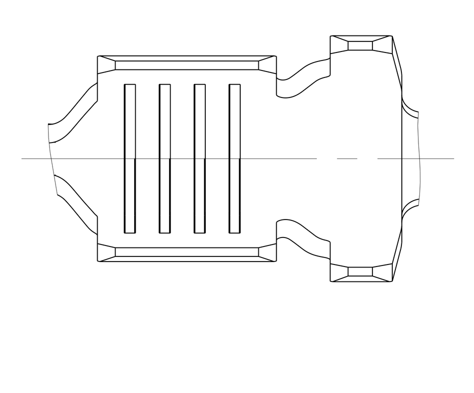

SERRATION DESIGN - 3

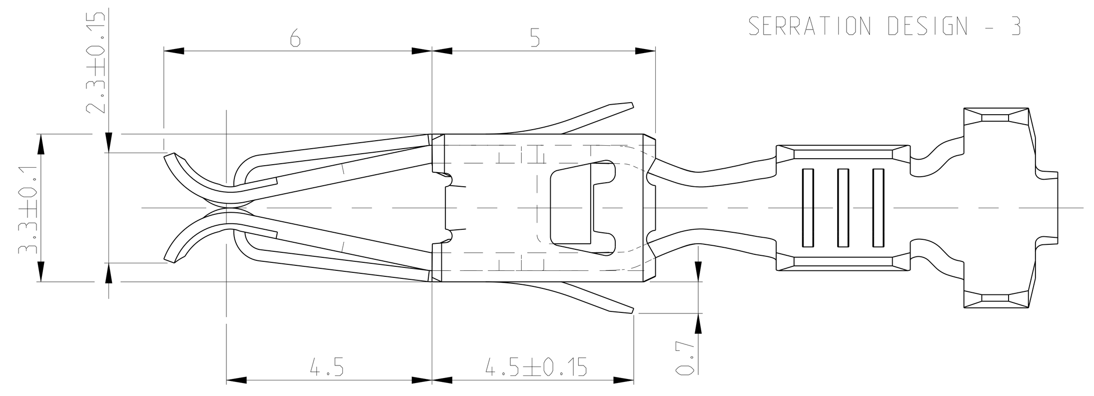

SERRATION DESIGN - 2

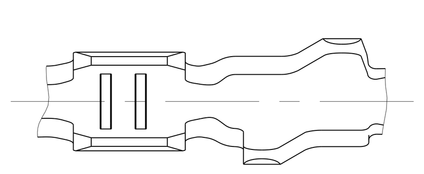

VERSION B
(SINGLE WIRE SEAL/ Einzel-Dichtungs-System)

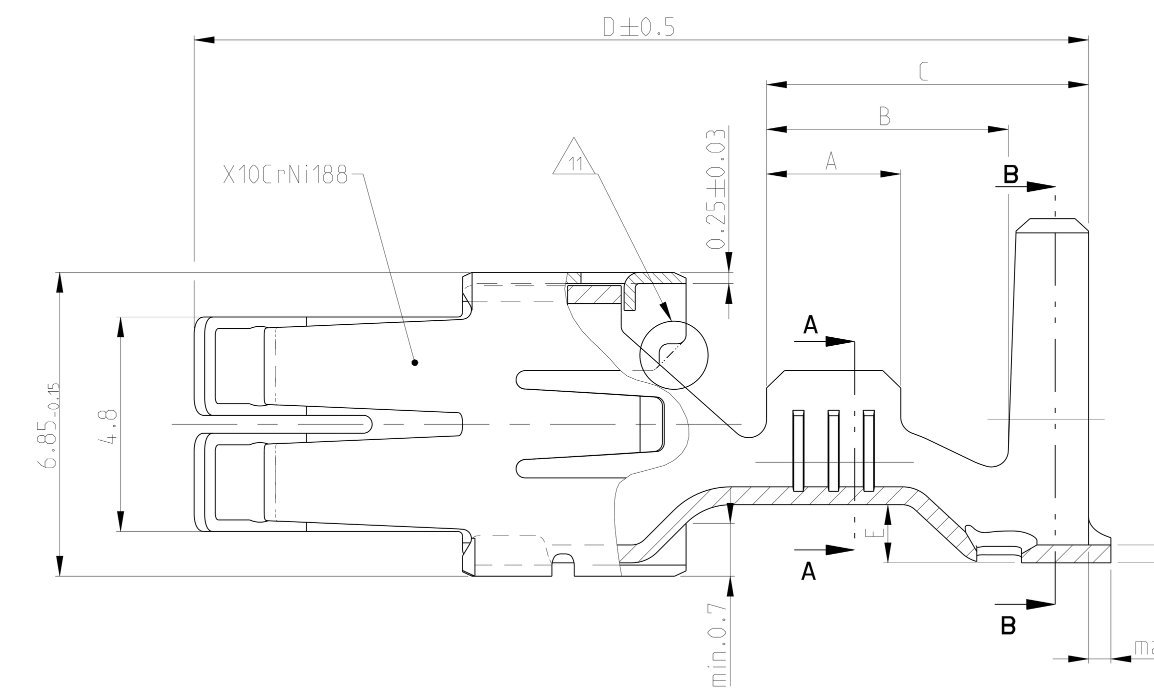

SERRATION DESIGN - 3

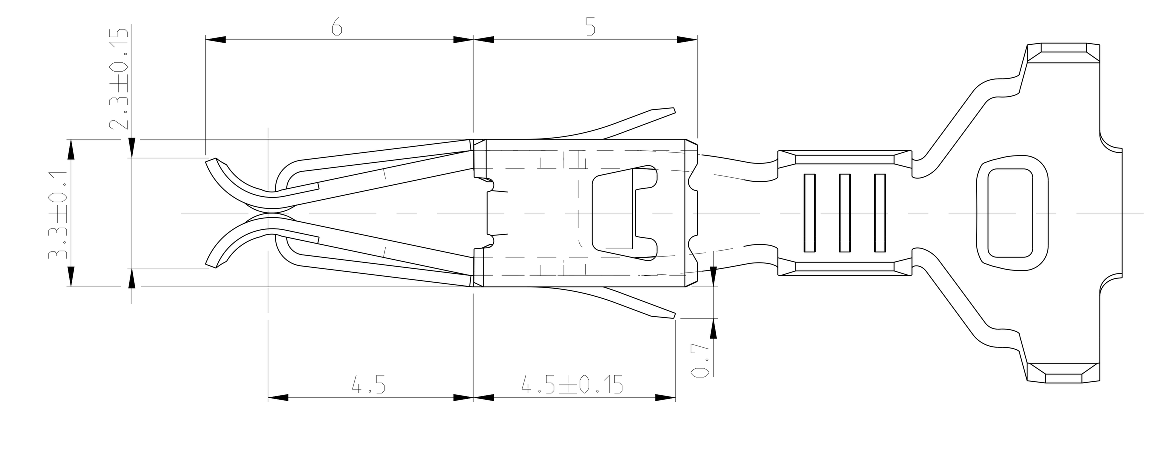

SERRATION DESIGN - 1

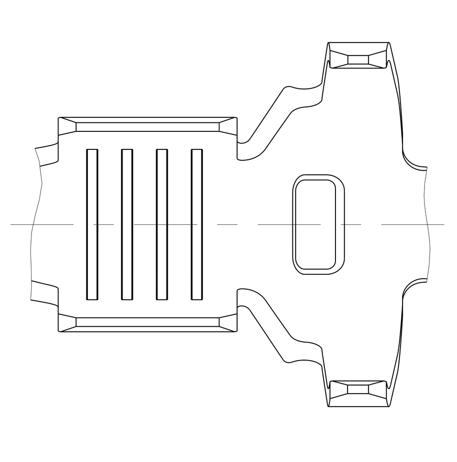

⚠1 CONTACT ZONE SELECTIVE
PRE SILVER PLATED MIN 3-4.5 µm
Kontaktzone selektiv
vorversilbert min. 3-4.5 µm

⚠2 CONTACT ZONE SELECTIVE
PRE SILVER PLATED MIN 1-1.5 µm
Kontaktzone selektiv
vorversilbert min. 1-1.5 µm

⚠3 CONTACT BODY: ELECTRO TIN PLATED OVER NICKEL
CONTACT AREA: GOLD PLATED
Kontaktkoerper: gal. verzinnt ueber Nickel
Kontaktzone: vergoldet

⚠4 CONTACT BODY: ELECTRO TIN PLATED OVER NICKEL
CONTACT AREA: SELECTIVE NICKEL PLATED 2-4 µm
Kontaktkoerper: gal. verzinnt ueber Nickel
Kontaktzone: selektiv vernickelt 2-4 µm

⚠5 CONTACT BODY: ELECTRO TIN PLATED OVER NICKEL
TOUCHING AREA TO CANTILEVER SPRING:
SELECTIVE AU PLATED OVER NICKEL
CANTILEVER SPRING: COMPLETELY AU PLATED
Kontaktkoerper: gal. verzinnt ueber Nickel
Anlageflaeche zur Ueberfeder
selektiv Au ueber Ni beschichtet
Ueberfeder: komplett Au beschichet

⚠6 CONTACT BODY: ELECTRO TIN PLATED OVER NICKEL
TOUCHING AREA TO CANTILEVER SPRING AND CONTACT AREA
SELECTIVE AU PLATED OVER NICKEL
CANTILEVER SPRING: COMPLETELY AU PLATED
Kontaktkoerper: gal. verzinnt ueber Nickel
Anlageflaeche zur Ueberfeder Kontaktzone
selektiv Au ueber Ni beschichtet
Ueberfeder: komplett Au beschichet

⚠7 PREFORMT ISO-AREA
ONLY FOR PN: 1241962-1
Isoflanken vorgeformt
nur bei PN:1241962-1

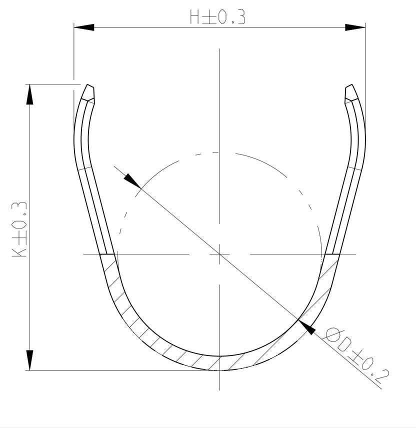

SECTION B-B
Schnitt B-B

⚠8 WRAP CRIMP
ONLY FOR PN:927839,927840
928989 AND 928990
Umfassungscrimp
nur bei PN: 927839,927840,928989 und 928990

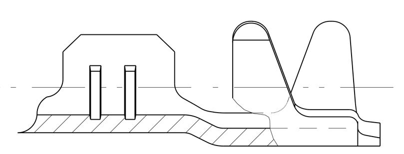

⚠9 TRANSITION ONLY FOR PN 927827,927828,927829,
927830,927833,927834,927837,AND 927838
Uebergang nur fuer PN 927827,927828,927829,
927830,927833,927834,927837,und 927838

⚠10 1-3 µm Sn28M LAYER FOR HIGHER
TEMPERATURE REQUIREMENTS
1-3 µm Sn28M Schicht fuer hoehere
Temperaturanforderungen

⚠11 DOTTED LINE IS ALTERNATIVE SHAPE
Gestrichelte Linie alternative Form

⚠12 OBSOLETE

(B8) ⚠13 SEE APPLICATION SPEC. FOR PREFERRED STANDARD TO MEET NEW REQUIREMENT
@LV214-2 SLOW MOTION BENDING TEST
Siehe Verarbeitungs Spezifikation fuer bevorzugten Standard um den neuen
Anforderungen der LV214-2 Slow Motion Pruefung zu genuegen

EXTRACTION TOOL 1-1579007-6 968107-1	THIS DRAWING IS A CONTROLLED DOCUMENT.	DWN M.PFEILSCHIFTER 06APR2011	TE Connectivity
	DIMENSIONS: mm	CHK V.HUHN 17MAY2000	NAME STANDARD POWER TIMER CONTACT Standard Power Timer Kontakt
	TOLERANCES UNLESS OTHERWISE SPECIFIED: 0 PLC ±0.2mm; 1 PLC ±; 2 PLC ±; 3 PLC ±; 4 PLC ±; ANGLES ±2°	APVD M.BLEICHER 17MAY2000	SIZE A0 CAGE CODE 00779 DRAWING NO C-1355048 RESTRICTED TO -
	MATERIAL - FINISH -	PRODUCT SPEC 108-18025; APPLICATION SPEC 114-18037; WEIGHT -	SCALE 10:1 SHEET 1 OF 1 REV B8
		CUSTOMER DRAWING	

4806 (3/11)

Mouser Electronics

Authorized Distributor

Click to View Pricing, Inventory, Delivery & Lifecycle Information:

TE Connectivity:

1241818-5