PRODUCT NUMBER
SEE SHEET 3

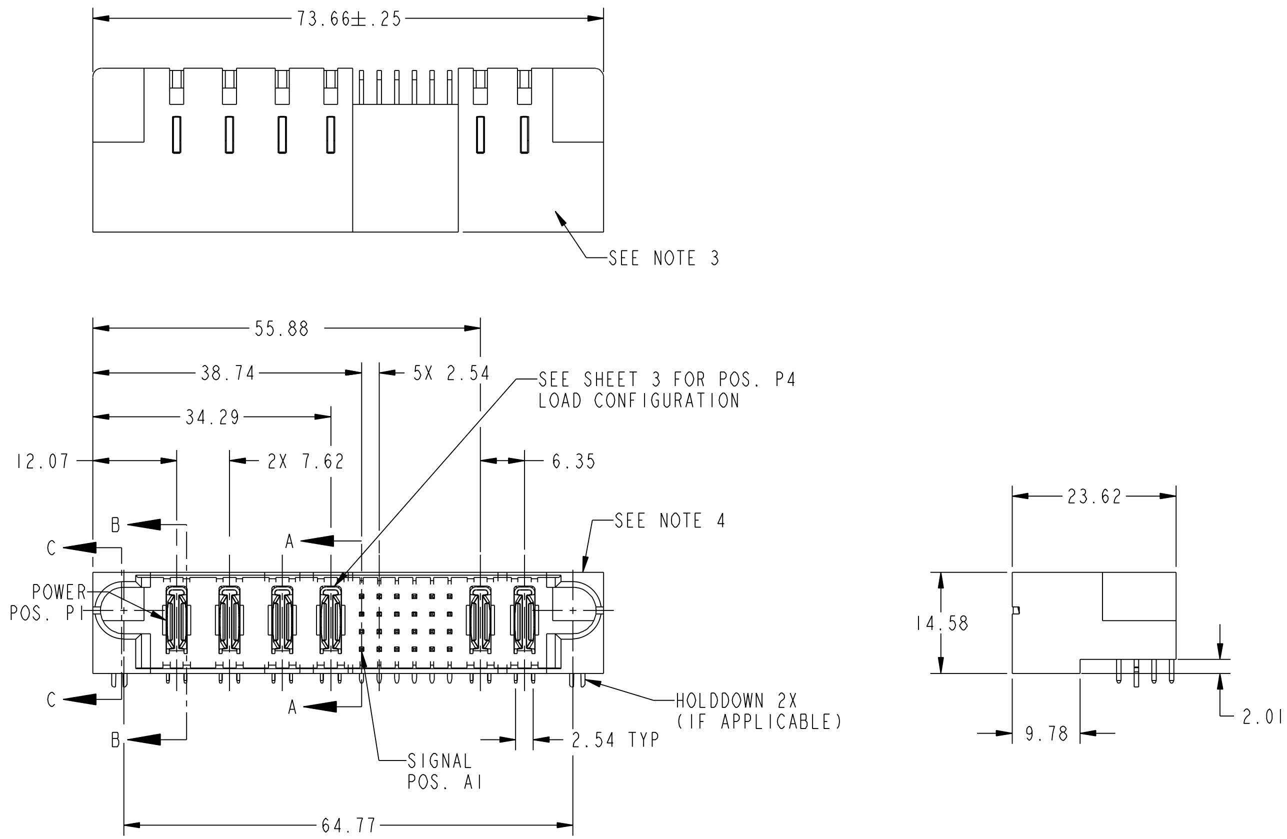

Tous droits strictement reserves. Reproduction ou communication a des tiers interdite sous quelque forme que ce soit sans autorisation ecrite du propietaire. Propriete de c FCI. Droits de reproduction FCI.

All rights strictly reserved. Reproduction or issue to third parties in any form whatever is not permitted without written authority from the proprietor. Property of FCI. Copyright FCI.

mat'l code	SEE NOTE			tolerances unless otherwise specified		CUSTOMER COPY
ltr	ecn no.	dr	date	linear	0.X ±0.5	
H	DG08-0272	JW	09/30/08		0.XX ±0.25	projection
B	V02943	JRW	12/18/00		0.XXX ±0.1	
C	V11186	CGD	04/12/01	angles	0° ±2°	
D	V12138	JRW	04/13/05	dr	E. KORFF 06/20/00	MM
E	DG05-0083	SW	04/13/05	engr	J. BROWN 06/20/00	
F	DG05-0103	JM	05/08/05	chr	J. BROWN 06/20/00	scale
G	DG05-0572	JMG	01/05/06	appd	J. BROWN 06/20/00	1:1

sheet	revision	H	H	H
index	sheet	1	2	3

FCI www.fciconnect.com

title 3ACP + 1P + 24S + 2P RIGHT ANGLE SOLDER HEADER

product family	PwrBlade	code 213
size A	dwg no 51786	sheet 1 of 3

cage code 22526

Pro/E

PDM: Rev:H STATUS: Released Printed: Dec 20, 2010

PRODUCT NUMBER
SEE SHEET 3

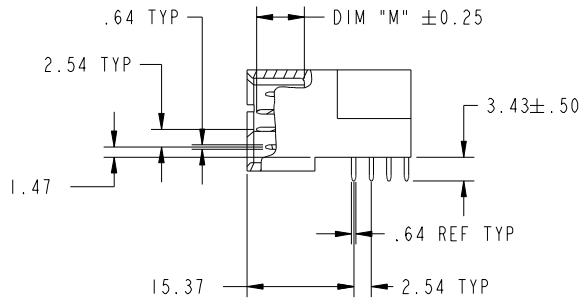

SECTION A-A

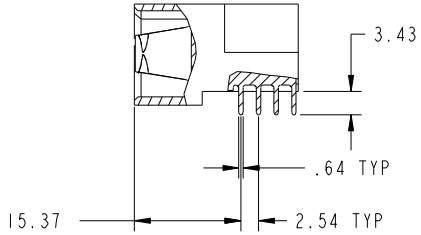

SECTION B-B

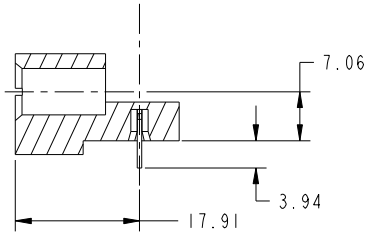

SECTION C-C

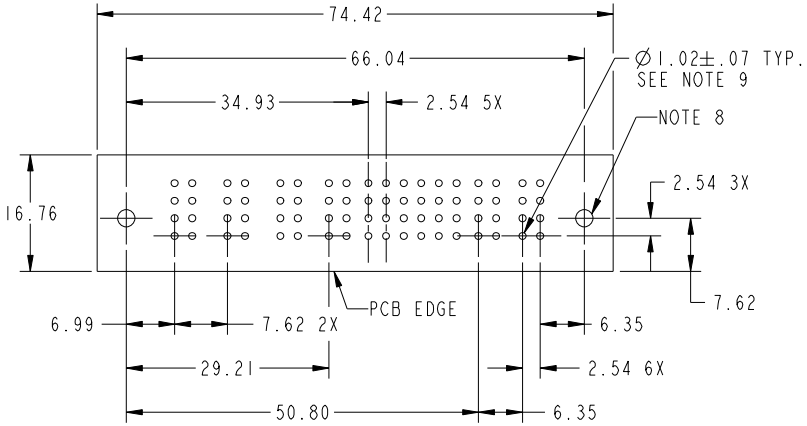

RECOMMENDED PCB LAYOUT

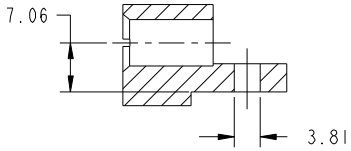

SECTION C-C
(WITHOUT HOLDDOWN)

mat'l code	SEE NOTE			tolerances unless otherwise specified			CUSTOMER	FCI	
ltr	ecn no.	dr	date	linear	0.X ±0.5		COPY	www.fciconnect.com	
H					0.XX ±0.25		projection	title	3ACP + 1P + 24S + 2P RIGHT ANGLE SOLDER HEADER
					0.XXX ±0.1				
				angles	0° ±2°				
				dr	E. KORFF	06/20/00	MM	product family PwrBlade	code 213
				engr	J. BROWN	06/20/00		size A / dwg no 51786	
				chr	J. BROWN	06/20/00	scale 1:1		sheet 2 of 3
				appd	J. BROWN	06/20/00			
sheet index	revision sheet							cage code 22526	

Pro/E

Tous droits strictement reservés. Reproduction ou communication a des tiers interdite sous quelque forme que ce soit sans autorisation ecrite du propietaire. Propriete de c FCI. Droits de reproduction FCI.

All rights strictly reserved. Reproduction or issue to third parties in any form whatever is not permitted without written authority from the proprietor. Property of FCI. Copyright FCI.

PDM: Rev:H STATUS:Released Printed: Dec 20, 2010

Tous droits strictement reserves. Reproduction ou communication a des tiers interdite sous quelque forme que ce soit sans autorisation ecrite du proprietaire. Propriete de c FCI. Droits de reproduction FCI.

All rights strictly reserved. Reproduction or issue to third parties in any form whatever is not permitted without written authority from the proprietor. Property of FCI. Copyright FCI.

PRODUCT NO.	ROWS	E1	P1	P2	P3	P4	1	2	3	4	5	6	P5	P6	E2
			POWER				SIGNAL						POWER		
51786-001__ NOTE: 2	D C B A	HA	PA	PA	PA	X	H	U	U	U	U	H	PA	PA	HA
							T	T	G	T	T	T			
							S	S	S	S	S	S			
							E	R	R	R	R	E			

PRODUCT NO.	ROWS	E1	P1	P2	P3	P4	1	2	3	4	5	6	P5	P6	E2
			POWER				SIGNAL						POWER		
51786-002__ NOTE: 2	D C B A	HA	PA	PA	PA	PA	H	U	U	U	U	H	PA	PA	HA
							T	T	G	T	T	T			
							S	S	S	S	S	S			
							E	R	R	R	R	E			

PRODUCT NO.	ROWS	E1	P1	P2	P3	P4	1	2	3	4	5	6	P5	P6	E2
			POWER				SIGNAL						POWER		
51786-003__ NOTE: 2	D C B A		PA	PA	PA	PA	H	U	U	U	U	H	PA	PA	
							T	T	G	T	T	T			
							S	S	S	S	S	S			
							E	R	R	R	R	E			

CONNECTOR NOTES:

1. HOUSING MATERIAL: UL 94 V-0 GLASS FILLED
   HIGH-TEMP THERMOPLASTIC
   POWER CONTACT MATERIAL: COPPER ALLOY
   SIGNAL PIN MATERIAL: COPPER ALLOY

2. PLATING
   △H SEE ITEM 1 & 2 IN PRINT 10064183 FOR PLATING SPEC. OF 51786-XXX; 51786-XXXLF

3. MANUFACTURER'S NAME, P/N, AND DATE CODE TO APPEAR ON THIS SURFACE.

4. PRODUCT SPECIFICATION GS-12-149.
   APPLICATION SPECIFICATION BUS-20-067.

PCB NOTES:

5. ALL DIMENSIONS ARE BASIC UNLESS OTHERWISE SPECIFIED.

6. ALL THROUGH HOLES ARE LOCATED WITH A TRUE POSITION OF 0.10

7. ALL HOLE DIAMETERS ARE FINISHED HOLE SIZE.

8. Ø2.49+0.05/-0.02 THROUGH HOLES ARE UNPLATED (-001 AND -002)
   Ø4.01±0.07 THROUGH HOLES ARE UNPLATED (-003 ONLY)

9. Ø1.151±0.025 DRILLED HOLES PLATED WITH 0.008 MIN SnPb OR Sn OVER 0.03 TO 0.08 Cu PLATING TO ACHIEVE Ø1.02±.07 HOLE.

10. A △H SYMBOL WILL BE NEXT TO ANY DIMENSION, VIEW, OR NOTE WHICH HAS BEEN MODIFIED WITH THE CURRENT DRAWING REVISION.

CODE	DIM "M" MATING LENGTH	CONTACT TYPE
T	[6.86]	SIGNAL
S	[6.86]	SIGNAL
U	[6.86]	SIGNAL
R	[6.86]	SIGNAL
PA	[N/A]	POWER
HA	[N/A]	HOLD-DOWN
H	[5.59]	SIGNAL
E	[5.59]	SIGNAL
G	[5.59]	SIGNAL
X	OMITTED	OMITTED

mat'l code	SEE NOTE			tolerances unless otherwise specified			CUSTOMER COPY
ltr	ecn no.	dr	date	linear	0.X ±0.5		
H					0.XX ±0.25		projection
					0.XXX ±0.1		
				angles	0° ±2°		
				dr	E. KORFF	06/20/00	MM
				engr	J. BROWN	06/20/00	
				chr	J. BROWN	06/20/00	scale 1:1
				appd	J. BROWN	06/20/00	
sheet index	revision sheet						

FCI www.fciconnect.com

title: 3ACP + 1P + 24S + 2P RIGHT ANGLE SOLDER HEADER

product family: PwrBlade | code: 213

size: A | dwg no: 51786 | sheet: 3 of 3

cage code: 22526

Pro/E

PDM: Rev:H STATUS:Released Printed: Dec 20, 2010

Mouser Electronics

Authorized Distributor

Click to View Pricing, Inventory, Delivery & Lifecycle Information:

FCI / Amphenol:

51786-001LF 51786-003LF