UNCONTROLLED DOCUMENT

SC:2	PART NUMBER	REV.
	SSB-COB16880SIW-11	B

REV.	E.C.N. NUMBER AND REVISION COMMENTS	DATE
A	E.C.N. #10854.	4.18.02
B	E.C.N. #11060.	11.20.03

UNDER REVISION

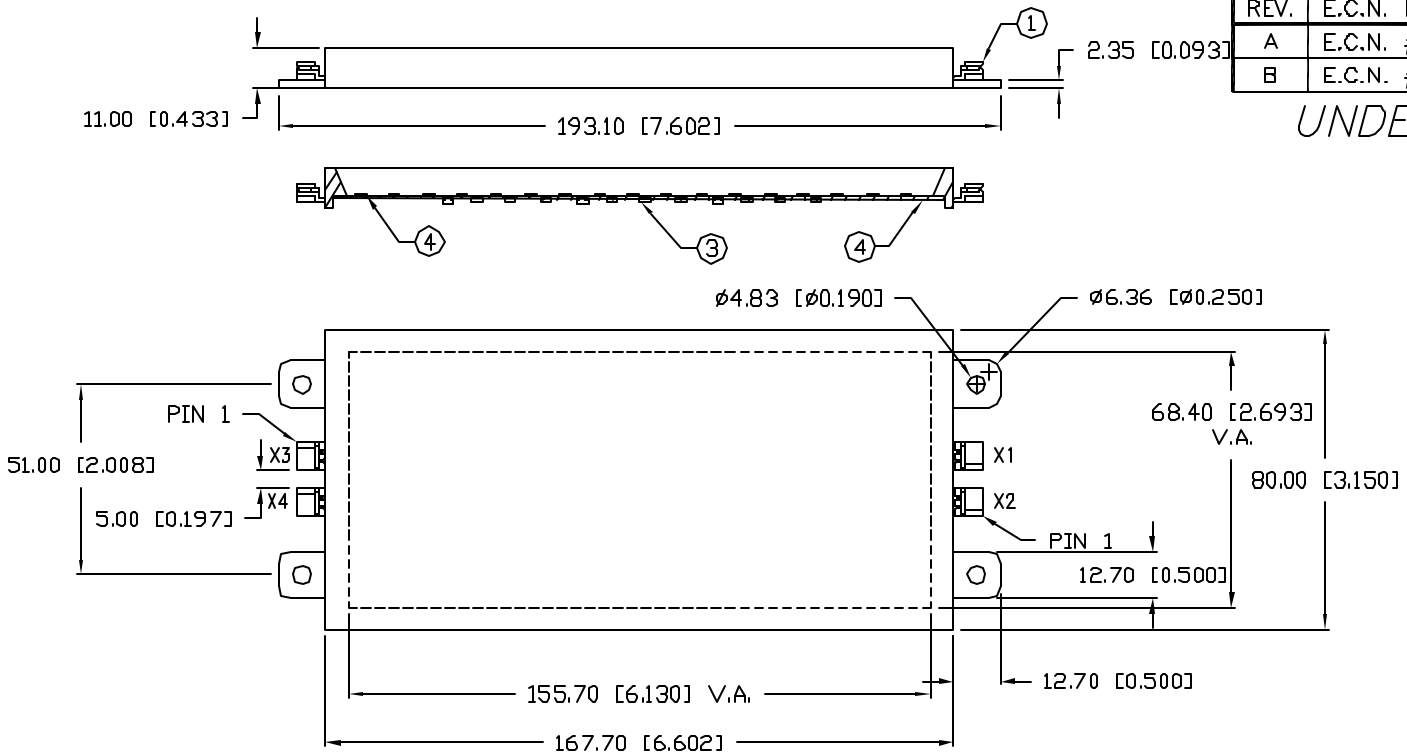

NOTES:

1. MOLEX PART NO. 22-05-7025.
2. [A] UL94V-0 FOR PLASTIC HOUSING.
3. [B] X1 & X2 ARE CONNECTED IN PARALLEL DISPLAYED ON BACK OF PART.
4. [B] X1 +24V FFSS
   X2 +24V FFSS
   X3 BRIGHTER
   X4 ALWAYS ON
   DISPLAYED ON BACK OF PART

ELECTRO-OPTICAL CHARACTERISTICS T_A=25°C PER MODULE V_f=24 V

PARAMETER	MIN	TYP	MAX	UNITS	TEST COND
PEAK WAVELENGTH		636		nm	
FORWARD VOLTAGE	18	24		V_f	
REVERSE VOLTAGE	24			V_r	V_r =200µA
[A] LUMINOUS INTENSITY		300		cd/m²	V_f=24 V
EMITTED COLOR:	RED				
REFLECTOR FINISH:	MILKY WHITE DIFFUSED				

LIMITS OF SAFE OPERATION AT 25°C PER DIE

PARAMETER	MAX	UNITS
PEAK FORWARD CURRENT*	150	mA
STEADY CURRENT	30	mA
POWER DISSIPATION	105	W
DERATE FROM 25°C	-1.2	mW/°C
OPERATING TEMP.	-40 TO +80	°C
STORAGE TEMP.	-40 TO +80	°C
SOLDERING TEMP.	+260	°C
2.0mm FROM BODY		3 SEC. MAX

* t<10µS

UNCONTROLLED DOCUMENT

*UNLESS OTHERWISE SPECIFIED TOLERANCES PER DECIMAL PRECISION ARE: X=±1 (±0.039), X.X=±0.5 (±0.020), X.XX=±0.25 (±0.010), X.XXX=±0.127 (±0.005). LEAD SIZE=±0.05 (±0.002), LEAD LENGTH=±0.75 (±0.030). MIN= +DECIMAL PRECISION -0.00 MAX.= +0.00 -DECIMAL PRECISION

REV.	PART NUMBER
B	SSB-COB16880SIW-11

18~32V, 160 CHIP AlInGaP RED BACKLIGHT, CHIP ON BOARD WITH CONNECTORS.

CONFIDENTIAL INFORMATION
THE INFORMATION CONTAINED IN THIS DOCUMENT IS THE PROPERTY OF LUMEX INC. EXCEPT AS SPECIFICALLY AUTHORIZED IN WRITING BY LUMEX INC., THE HOLDER OF THIS DOCUMENT SHALL KEEP ALL INFORMATION CONTAINED HEREIN CONFIDENTIAL AND SHALL PROTECT SAME IN WHOLE OR IN PART FROM DISCLOSURE AND DISSEMINATION TO ALL THIRD PARTIES.

RELIABILITY NOTE
OUR MANY YEARS OF EXPERIENCE DATA ACCUMULATION INDICATE THAT SOLDER HEAT IS A MAJOR CAUSE OF EARLY AND FUTURE FAILURE. PLEASE PAY ATTENTION TO YOUR SOLDERING PROCESS.

LUMEX
290 E. HELEN ROAD
PALATINE, IL 60067-6976
PHONE: +1.847.359.2790
US WEB: www.lumex.com
TW WEB: www.lumex.com.tw

DRAWN BY:	CHECKED BY:	APPROVED BY:	DATE: 11.2.01
BS/CT			PAGE: 1 OF 2
			SCALE: N/A

Mouser Electronics

Authorized Distributor

Click to View Pricing, Inventory, Delivery & Lifecycle Information:

Lumex:
SSB-COB16880SIW-11