THIS DRAWING IS UNPUBLISHED. RELEASED FOR PUBLICATION 20
© COPYRIGHT 20 BY TYCO ELECTRONICS CORPORATION, ALL RIGHTS RESERVED.

LOC	DIST
GP	00

REVISIONS

P	LTR	DESCRIPTION	DATE	DWN	APVD
	A	REV PER EC 0S12-0206-05	18APR2005	BC	GG
	A1	REV PER ECO-07-018424	04SEP2007	BC	GG
	A2	REVISED PER ECO-10-000445	25JAN2010	KK	HMR

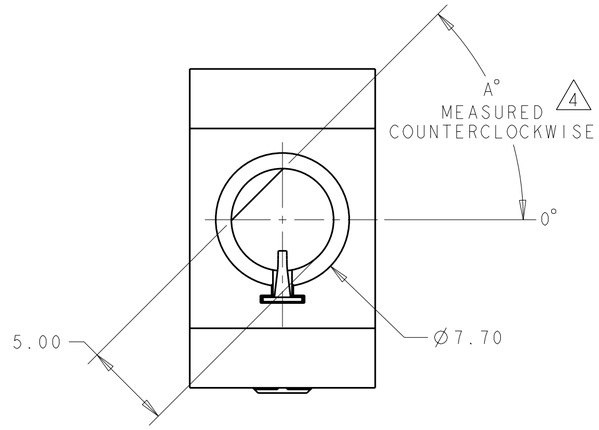

VIEW Y
ESD ORIENTATION

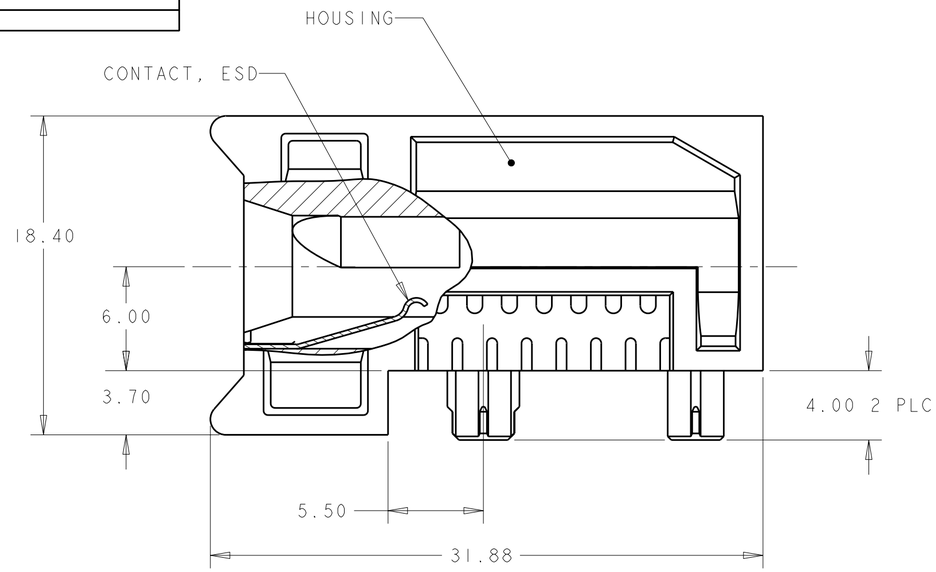

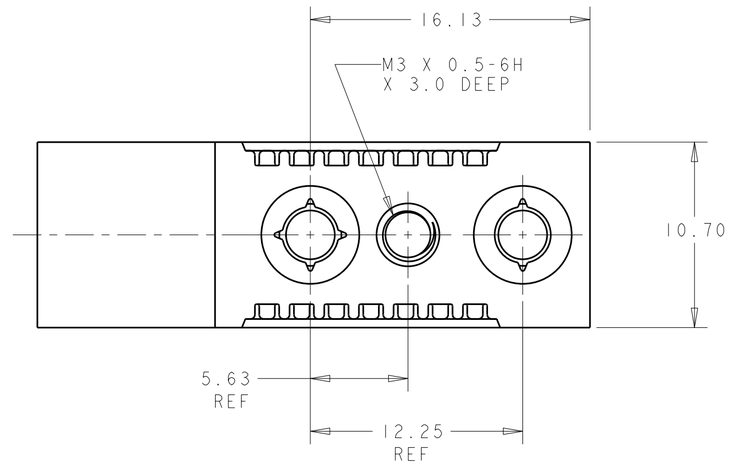

1. MATERIAL:
   HOUSING: ZINC ALLOY DIE CASTING, ZAMAK 3
   CONTACT: PHOSPHOR BRONZE
2. FINISH:
   HOUSING: CHROMATE CONVERSION COATING
   ESD CONTACT: 1.27µm MINIMUM NICKEL ALL OVER
3. HOLE FOR POSITIVE RETENTION SCREW
4. DASH NUMBERS INDICATE KEY ORIENTATION
   (P/N 1410297-2 SHOWN ON DRAWING)
5. GROUND PAD Ø5mm ON RETENTION HARDWARE SIDE OF PCB
6. GUIDE MODULE W/O KEYING,
   GUIDE PIN 1410548-2 & 1410548-3 MUST BE ORIENTED
   TO PROVIDE PROPER ESD PERFORMANCE
7. FINISH:
   HOUSING: NICKEL OVER COPPER.
   ESD CONTACT: 1.27µm MINIMUM NICKEL ALL OVER.
8.
9. OBSOLETE PARTS: OBSOLETE CIS STREAMLINING PER
   D.RENAUD/D.SINISI

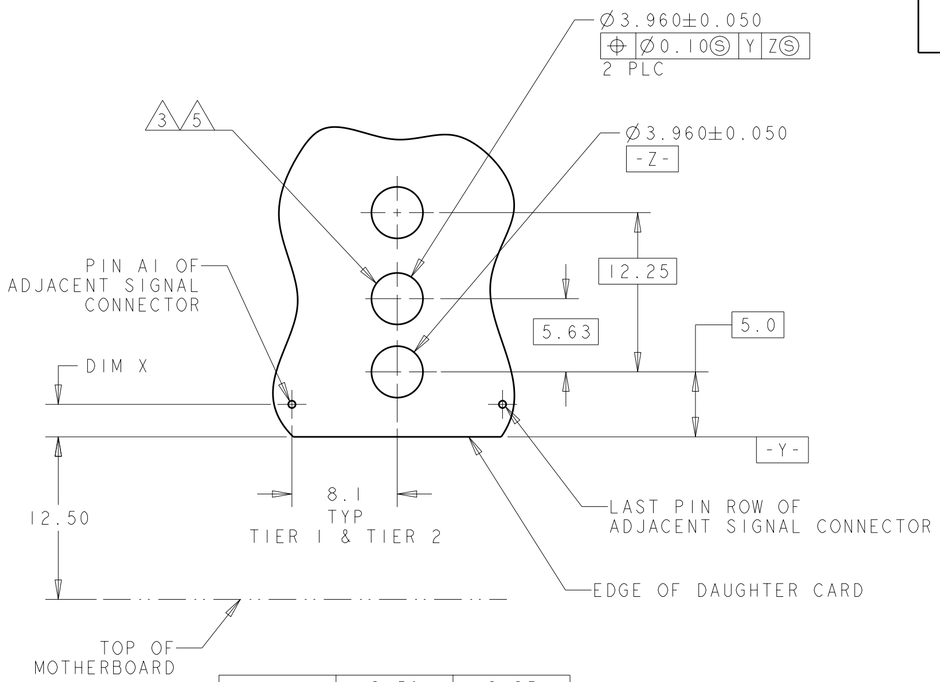

DIM X	2.50	2.25
	TIER 1	TIER 2

PCB LAYOUT
CONNECTOR SIDE
SCALE 3:1

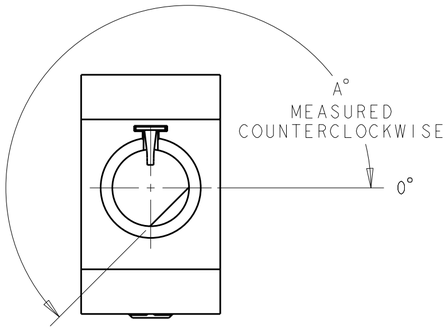

VIEW Z
ESD ORIENTATION
SCALE 3:1

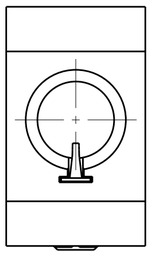

VIEW W 6
ESD ORIENTATION
SCALE 3:1

		VIEW W	6	7 1-1410297-9
		VIEW Y	315°	7 1-1410297-8
		VIEW Z	270°	7 1-1410297-7
		VIEW Z	225°	7 1-1410297-6
		VIEW Z	180°	7 1-1410297-5
		VIEW Z	135°	7 1-1410297-4
		VIEW Y	90°	7 1-1410297-3
		VIEW Y	45°	7 1-1410297-2
		VIEW Y	0°	7 1-1410297-1
	SUPERSEDED BY 1-1410297-9	VIEW W	6	2 1410297-9
9	SUPERSEDED BY 1-1410297-8	VIEW Y	315°	2 1410297-8
	SUPERSEDED BY 1-1410297-7	VIEW Z	270°	2 1410297-7
	SUPERSEDED BY 1-1410297-6	VIEW Z	225°	2 1410297-6
9	SUPERSEDED BY 1-1410297-5	VIEW Z	180°	2 1410297-5
9	SUPERSEDED BY 1-1410297-4	VIEW Z	135°	2 1410297-4
	SUPERSEDED BY 1-1410297-3	VIEW Y	90°	2 1410297-3
	SUPERSEDED BY 1-1410297-2	VIEW Y	45°	2 1410297-2
	SUPERSEDED BY 1-1410297-1	VIEW Y	0°	2 1410297-1
		ESD ORIENTATION	A°	PART NUMBER 4

THIS DRAWING IS A CONTROLLED DOCUMENT FOR TYCO ELECTRONICS CORPORATION. IT IS SUBJECT TO CHANGE AND THE CONTROLLING ENGINEERING ORGANIZATION SHOULD BE CONTACTED FOR THE LATEST REVISION.

DIMENSIONS: mm

TOLERANCES UNLESS OTHERWISE SPECIFIED:
0 PLC ±-
1 PLC ±-
2 PLC ±0.13
3 PLC ±0.013
4 PLC ±-
ANGLES ±-

MATERIAL 1 -
FINISH 2 -

DWN L.SIPE 26OCT2001
CHK D.DEFIBAUGH 26OCT2001
APVD G.GRIFFITH 18APR2005
PRODUCT SPEC -
APPLICATION SPEC -
WEIGHT -

Tyco Electronics
Tyco Electronics Corporation
Harrisburg, PA 17105-3608

NAME KEY/ESD GUIDE MODULE ASSEMBLY, 20.3mm, MULTIGIG, DAUGHTER CARD

SIZE	CAGE CODE	DRAWING NO	RESTRICTED TO
A2	00779	C-1410297	-

CUSTOMER DRAWING SCALE 1:1 SHEET 1 OF 1 REV A2

AMP 1471-9 REV 31MAR2000

Pro/ENGINEER DRAWING

Mouser Electronics

Authorized Distributor

Click to View Pricing, Inventory, Delivery & Lifecycle Information:

TE Connectivity:

1-1410297-9