THIS DRAWING IS UNPUBLISHED. RELEASED FOR PUBLICATION - ,- .
© COPYRIGHT - By - ALL RIGHTS RESERVED.

REVISIONS

| P | LTR | DESCRIPTION | DATE | DWN | APVD |
|---|---|---|---|---|---|
| | B | EC 0G3C 0786 04 | 01-02-05 | BSV | JLG |
| | B1 | REVISED PER ECO-09-020689 | 25AUG09 | KK | AEG |
| | C | REVISED PER ECO-17-002584 | 10APR2017 | BDA | MM |

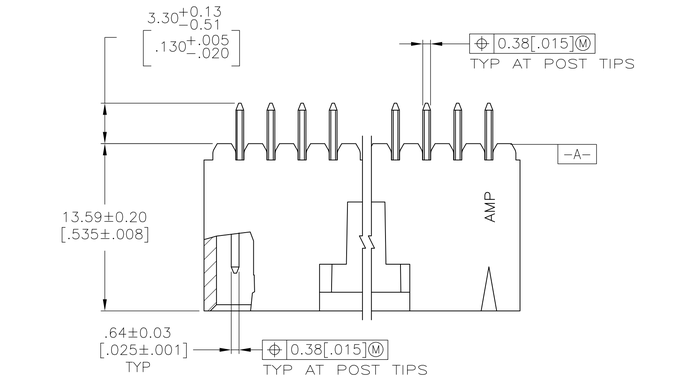


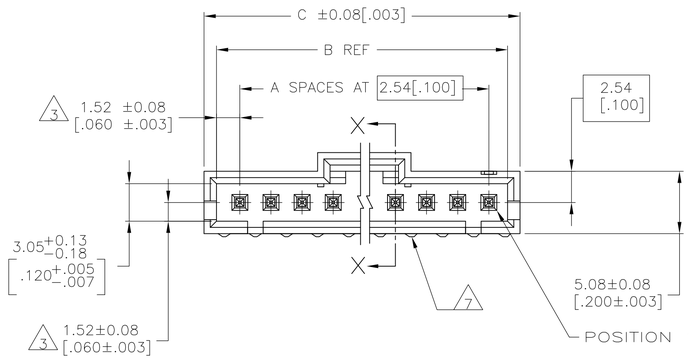


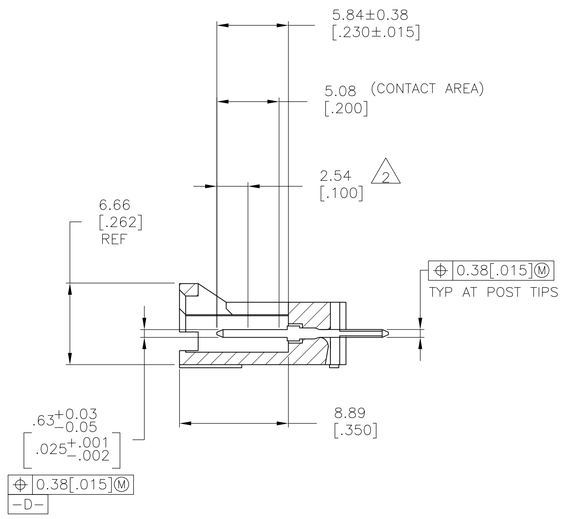


SECTION X−X

1. FINISH: 0.00254[.000100] BRIGHT TIN−LEAD OVER 0.00127[.000050] NICKEL.
2. POINT OF MEASUREMENT FOR PLATING THICKNESS.
3. THE NOTED DIMENSIONS APPLY FROM THE BASIC DIMENSION CENTER LINE (NOT THE POST CENTER LINE) TO THE SURFACE INDICATED.
4. MATERIAL− HOUSING: LCP, COLOR−BLACK.
   POSTS: BRASS.
5. FINISH: 0.00254[.000100] MATTE TIN OVER 0.00127[.000050] NICKEL.
6. HIGH TEMPERATURE CONFIGURATION
7. STANDOFFS NOT PRESENT ON UNDER SIDE OF ASSEMBLY
8. OBSOLETE PARTS: OBSOLETE CIS STREAMLINING PER D.RENAUD/D.SINISI

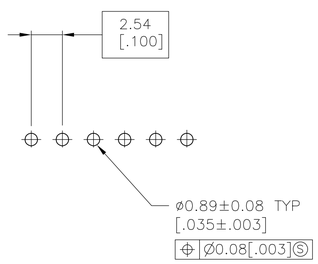


RECOMMENDED HOLE LAYOUT

| | | | | | | | | | |
|---|---|---|---|---|---|---|---|---|---|
| 8 | OBSOLETE | 6 7 | 5 | 2 | 35.43 [1.395] | 35.56 [1.320] | 12 | 13 | 5−147574−2 |
| 8 | OBSOLETE | 6 7 | 5 | 12 | 35.43 [1.395] | 35.56 [1.320] | 12 | 13 | 5−147574−1 |
| | | 6 | 1 | 2 | 35.43 [1.395] | 35.56 [1.320] | 12 | 13 | 147574−2 |
| 8 | OBSOLETE | 6 | 1 | 12 | 35.43 [1.395] | 35.56 [1.320] | 12 | 13 | 147574−1 |
| | | REMARKS | FINISH | POST NO. OMITTED | C | B | A | NO. OF POSN | PART NO. |

THIS DRAWING IS A CONTROLLED DOCUMENT.

DIMENSIONS: mm [INCHES]

TOLERANCES UNLESS OTHERWISE SPECIFIED:
0 PLC ± −
1 PLC ± −
2 PLC ± 0.13[.005]
3 PLC ± −
4 PLC ± −
ANGLES ± −

MATERIAL 4

FINISH SEE TABLE

DWN R BROWN 02-04-01
CHK K WRIGHT 02-04-01
APVD K WRIGHT 02-04-01

PRODUCT SPEC —
APPLICATION SPEC —
WEIGHT —

TE Connectivity

NAME HDR ASSY,AMPMODU MTE,VERTICAL SINGLE ROW,2.54[.100]CL,0.64[.025] SQPOSTS,−WITH LATCH

SIZE A1 | CAGE CODE 00779 | DRAWING NO C−147574 | RESTRICTED TO —

CUSTOMER DRAWING | SCALE 4:1 | SHEET 1 OF 1 | REV C

4805 (1/15)