THIS DRAWING IS UNPUBLISHED. RELEASED FOR PUBLICATION .2000.
© COPYRIGHT 1998 BY - ALL RIGHTS RESERVED.

PN 1-6.2-6 & 0-2

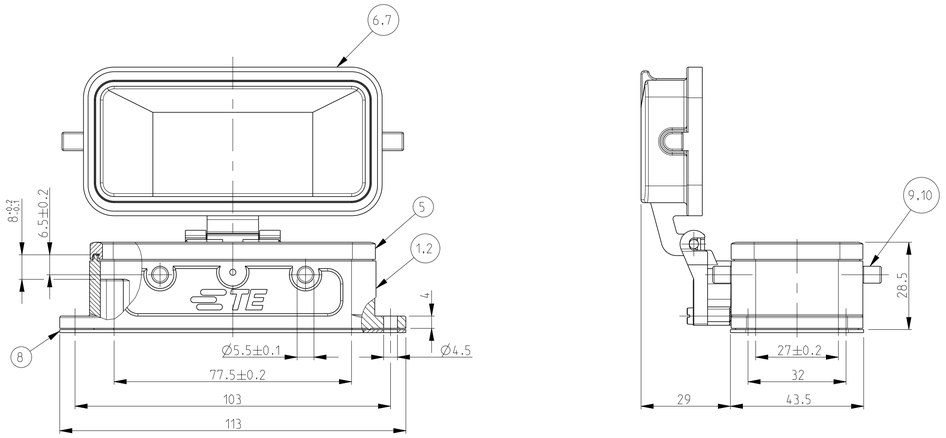

LANDING MILLED OFF

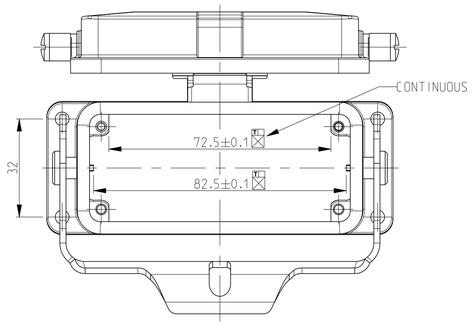

PN 1-2.2-2.~~0-1.0-3~~ & ~~0-5~~

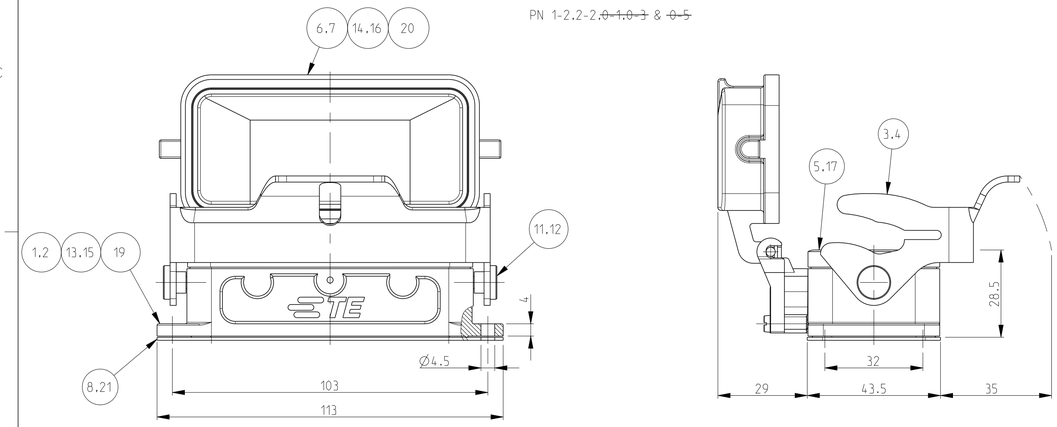

PANEL CUT OUT

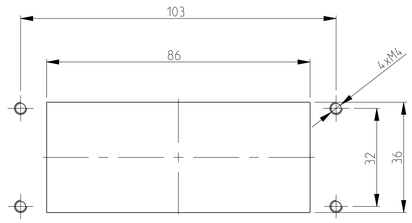

PN 0-4

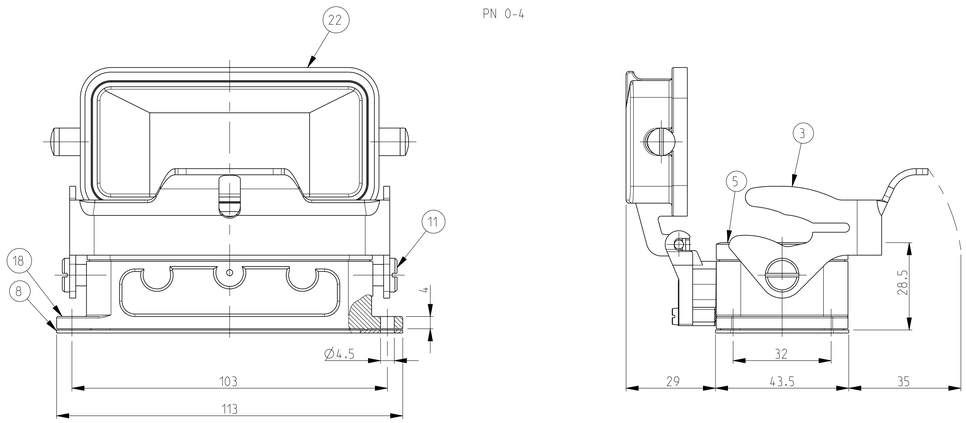

REVISIONS

P	LTR	DESCRIPTION	DATE	DWN	APVD
	B8	Released as per ECR-07-030430	17.12.07	SP	TS
	C	ECR-15-015728	19APR2016	GCM	JB
	C1	ECR-16-015318	20SEP2017	GR	MKO
	C2	ECR-16-016768	15NOV2017	GR	MKO

NOTES

1 Material:Housing:Aluminium Diecasting Alloy
Seals: Neoprene

2 Surface- Varnish -Grey : Red
-Aluminium Oxide +Varnish Black
-Chromit AL TCP - passivation

3 Varnish on the inside not necessary

4 Packaging Quantity 5 Pieces in a box

5 Special Packaging Quantity 50 pieces in a kan ban box

PN 1-6.2-6 & 0-2

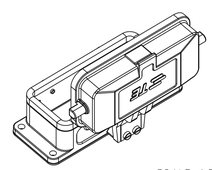

SCALE 1:2

PN 1-2.2-2.~~0-1.0-3~~ & ~~0-5~~

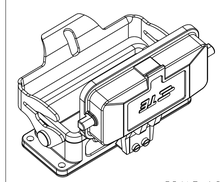

SCALE 1:2

PN 0-4

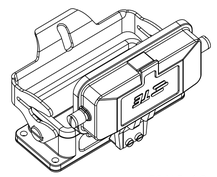

SCALE 1:2

0-5	0-4	0-3	0-2	0-1	2-6	1-6	2-2	1-2	DESCRIPTION	MATERIAL	SURFACE	COLOR	ITEM NO	REMARKS
	1								Cover HB	Aluminium		Grey	22	Neutral
1		1							Flange Seal	Neoprene		Black	21	Conductive
1									Cover HB-EMV	Aluminium	SEE NOTE 2	Black	20	
1									Surface mounted housing bottom entry HB-EMV	Aluminium	SEE NOTE 2	Black	19	
	1								Surface mounted housing bottom entry HB	Aluminium		Grey	18	Neutral
1		1							Profile Seal	Neoprene		Black	17	Conductive
		1							Cover HB-EMV	Aluminium	SEE NOTE 2	Without varnish	16	
		1							Surface mounted housing bottom entry HB-EMV	Aluminium	SEE NOTE 2	Without varnish	15	
				1					Cover HB	Aluminium		Red	14	
				1					Surface mounted housing bottom entry HB	Aluminium		Red	13	
		2					2		LB-Clip Positioner	Stainless Steel	Blank		12	
2	2			2				2	LB-Clip Positioner	Steel	Zinc Plated	Blue	11	
					4				VS-Clip Bolt	Stainless Steel	Blank		10	
			4			4			VS-Clip Bolt	Steel	Zinc Plated	Blue	9	
	1		1	1	1	1	1	1	Flange Seal	Neoprene		Black	8	
					1		1		Cover HB-K	Aluminium	Aluminium Oxide	Black	7	
			1			1		1	Cover HB	Aluminium		Grey	6	
	1		1	1	1	1	1	1	Profile Seal	Neoprene		Black	5	
		1					1		LB-Side Clip	Stainless Steel	Blank		4	
1	1			1				1	LB-Side Clip	Steel	Zinc Plated	Blue	3	
					1		1		Surface mounted housing bottom entry HB-K	Aluminium	Aluminium Oxide	Black	2	
			1			1		1	Surface mounted housing bottom entry HB	Aluminium		Grey	1	

OBSOLETE: 0-3, 0-2, 0-1

ORDERING TEXT (5)

- HB.16.AGD-LB
- HB-K.16.AGD-LB
- HB.16.AGD
- HB-K.16.AGD
- ~~HB.16.AGD-LB~~
- HB.16.AGD.KM
- ~~HB-EMV.16.AGD-LB~~
- HB.16.AGD-LB
- HB-EMV.16.AGD-LB

THIS DRAWING IS A CONTROLLED DOCUMENT.

DIMENSIONS: mm

TOLERANCES UNLESS OTHERWISE SPECIFIED: ANGLES ISO 2768-m-2; LINEAR ISO 9001/00
0 PLC ±
1 PLC ±
2 PLC ±
3 PLC ±
4 PLC ±
ANGLES ±

MATERIAL

FINISH

DWN Schneider 13.04.2000
CHK Schweiger 13.04.2000
APVD –
PRODUCT SPEC –
APPLICATION SPEC –
WEIGHT –

TE Connectivity

NAME Surface Mounted Housing Bottom Entry HB.16.AGD

SIZE	CAGE CODE	DRAWING NO	RESTRICTED TO
A1	00779	C-1102305	

CUSTOMER DRAWING | SCALE 1:1 | SHEET 1 OF 1 | REV C2

4805 (3/13)

Mouser Electronics

Authorized Distributor

Click to View Pricing, Inventory, Delivery & Lifecycle Information:

TE Connectivity:

1102305-4