THIS DRAWING IS UNPUBLISHED. RELEASED FOR PUBLICATION -.- .
© COPYRIGHT - By - ALL RIGHTS RESERVED.

LOC	DIST
GP	00

REVISIONS

P	LTR	DESCRIPTION	DATE	DWN	APVD
	Z1	REVISED PER ECO-11-004835	11MAR11	RK	HMR

1. MATERIAL
CONTACTS: PHOSPHOR BRONZE
HOUSING & PIN SPACER: UL 94V-0 RATED, THERMOPLASTIC, BLACK
BRACKET: ZINC
SHELL: CARBON STEEL
BOARDLOCKS: COPPER ALLOY.

2. FINISH
CONTACTS: EITHER 0.76μm [.000030] MIN GOLD PLATE FOR A LENGTH OF 0.64 [.025] MAX, 0.13 [.005] MIN FROM MATING END OR GOLD FLASH OVER PALLADIUM NICKEL PLATE, 0.76μm [.000030] MIN TOTAL FOR A LENGTH OF 0.64 [.025] MAX, 0.13 [.005] MIN FROM MATING END. 3.81μm [.000150] MIN TIN-LEAD ON OPPOSITE END FOR A LENGTH OF 2.72 [.107] MIN, BOTH OVER 1.27μm [.000050] MIN NICKEL.
SHELL: 5.08μm [.000200] MIN NICKEL OVER 1.27μm [.000050] MIN COPPER.
BRACKET: 2.54μm [.000100] MIN NICKEL OVER 5.08μm [.000200] COPPER.

3. 5.08μm [.000200] MIN TIN-LEAD OVER 1.27μm [.000050] MIN NICKEL.

4. 3.00μm [.000118] MIN TIN OVER 1.27μm [.000050] MIN NICKEL.

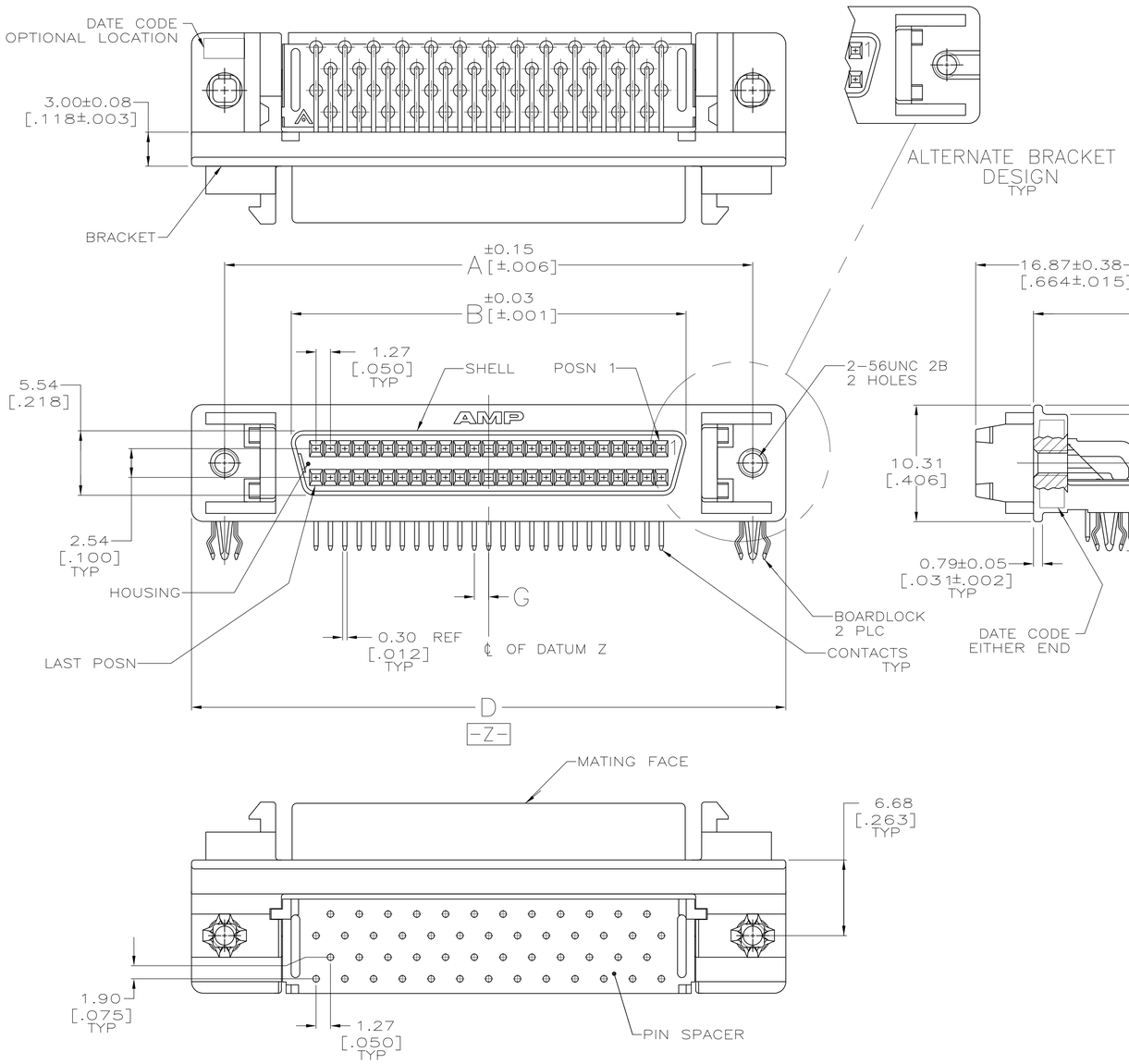

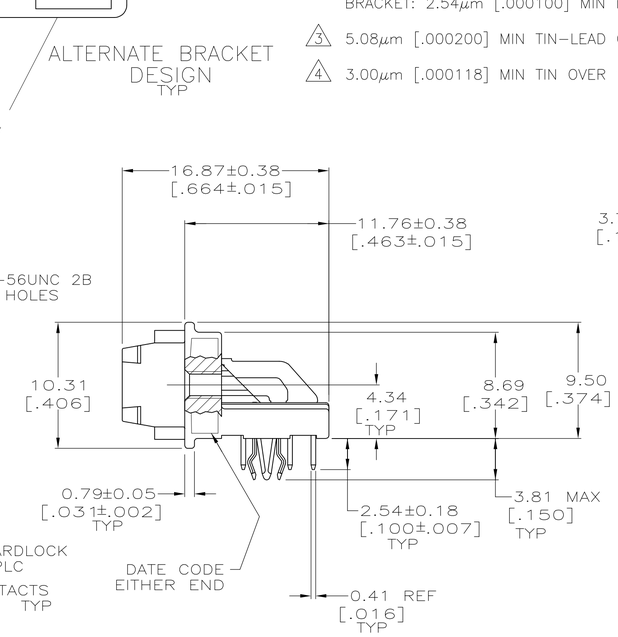

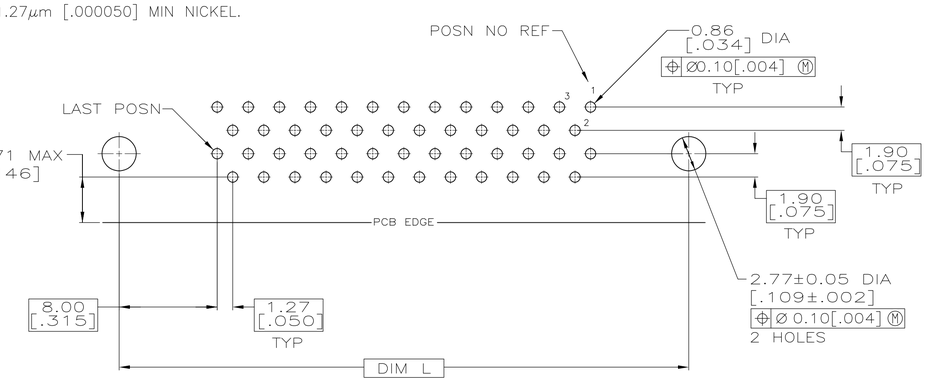

P.C.BOARD MOUNTING DIMENSIONS
CONNECTOR SIDE
P.C.BOARD THICKNESS 1.57±0.20 [.062±.008]
PC BOARD PATTERN S

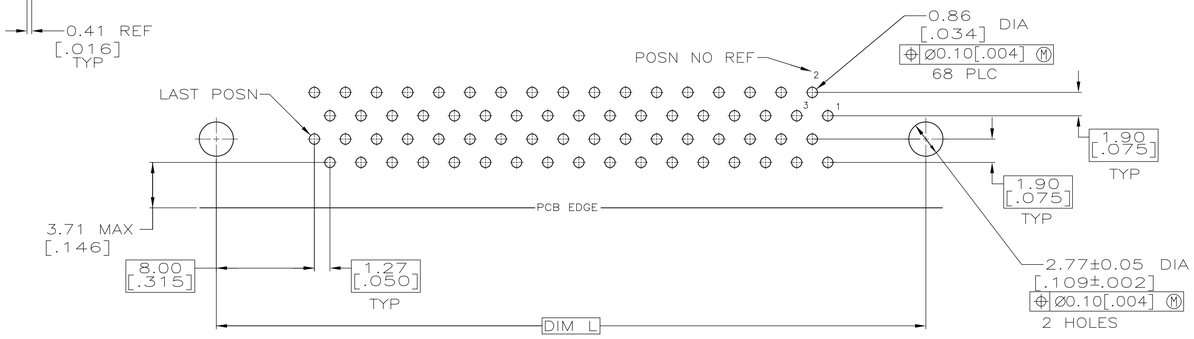

P.C.BOARD MOUNTING DIMENSIONS
CONNECTOR SIDE
P.C.BOARD THICKNESS 1.57±0.20 [.062±.008]
PC BOARD PATTERN T

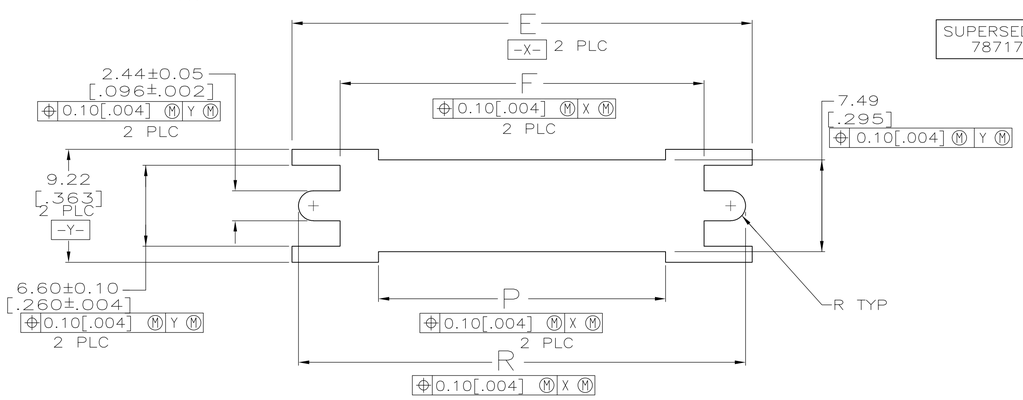

RECOMMENDED PANEL CUTOUT

	TUBE	4	T	60.35 [2.376]	47.85 [1.884]	57.91 [2.280]	0.64 [.025]	54.23 [2.135]	61.98 [2.440]	63.88 [2.515]	46.13 [1.816]	57.91 [2.280]	68	1-787171-6
SUPERSEDED BY 787171-5	TRAY	3	S	48.92 [1.926]	36.42 [1.434]	46.48 [1.834]	1.27 [.050]	42.80 [1.685]	50.55 [1.990]	52.45 [2.065]	34.70 [1.366]	46.48 [1.830]	50	1-787171-5
	TUBE	3	T	80.67 [3.176]	68.17 [2.684]	78.23 [3.080]	0.64 [.025]	74.55 [2.935]	82.30 [3.240]	84.20 [3.315]	66.45 [2.616]	78.23 [3.080]	100	787171-9
	TUBE	3	T	60.35 [2.376]	47.85 [1.884]	57.91 [2.280]	0.64 [.025]	54.23 [2.135]	61.98 [2.440]	63.88 [2.515]	46.13 [1.816]	57.91 [2.280]	68	787171-7
	TUBE	3	S	48.92 [1.926]	36.42 [1.434]	46.48 [1.834]	1.27 [.050]	42.80 [1.685]	50.55 [1.990]	52.45 [2.065]	34.70 [1.366]	46.48 [1.830]	50	787171-5
	TUBE	3	T	42.57 [1.676]	30.07 [1.184]	40.13 [1.580]	0.64 [.025]	36.45 [1.435]	44.20 [1.740]	46.10 [1.815]	28.35 [1.116]	40.13 [1.580]	40	787171-4
	TUBE	3	S	33.68 [1.326]	21.18 [.834]	31.24 [1.230]	1.27 [.050]	27.56 [1.085]	35.31 [1.390]	37.21 [1.465]	19.46 [.766]	31.24 [1.230]	26	787171-2
PACKAGING	BOARDLOCK FINISH	PC BOARD PATTERN	R	P	L	G	F	E	D	B	A	NO OF POS	PART NUMBER	

THIS DRAWING IS A CONTROLLED DOCUMENT.

DIMENSIONS: mm [INCHES]

TOLERANCES UNLESS OTHERWISE SPECIFIED:
0 PLC ± -
1 PLC ± -
2 PLC ± 0.13 [.005]
3 PLC ± -
4 PLC ± -
ANGLES ± -

MATERIAL 1
FINISH 2

DWN 4-25-94 D.BROCKWAY
CHK 4-28-94 R.STONE
APVD 4-28-94 F. McCORKEL
PRODUCT SPEC 108-1228
APPLICATION SPEC 114-40029
WEIGHT —

TE Connectivity

NAME: RECEPTACLE ASSEMBLY, SHIELDED, RIGHT ANGLE, RAILED, TM

SIZE	CAGE CODE	DRAWING NO	RESTRICTED TO
A1	00779	C-787171	—

CUSTOMER DRAWING SCALE 4:1 SHEET 1 OF 1 REV Z1

4805 (3/11)

Mouser Electronics

Authorized Distributor

Click to View Pricing, Inventory, Delivery & Lifecycle Information:

TE Connectivity:

1-787171-6