General Specifications

Electrical Capacity (Resistive Load)

Logic Level: 0.4VA maximum @ 48V AC/DC maximum
(Applicable Range 0.1mA ~ 0.1A @ 20mV ~ 48V)
Note: Find additional explanation of operating range in Supplement section.

Other Ratings

Contact Resistance: 50 milliohms maximum
Insulation Resistance: 1,000 megohms minimum @ 500V DC
Dielectric Strength: 1,000V AC minimum between contacts for 1 minute minimum;
1,500V AC minimum between contacts & case for 1 minute minimum
Mechanical Life: 100,000 operations minimum for bat lever models
50,000 operations minimum for locking lever models
Electrical Life: 50,000 operations minimum
Contact Timing: Nonshorting (break-before-make)
Angle of Throw: 24°

Materials & Finishes

Toggle/Lever: Brass with chrome plating
Bushing: Brass with nickel plating
Support Bracket: Straight PC: phosphor bronze with tin plating; right angle & vertical: brass with tin plating
Housing: Polybutylene terephthalate (PBT) (UL94V-0)
Base: 1- and 2-pole GFR polyamide (UL94V-0); 4-pole liquid crystal polymer (LCP) (UL94V-0)
Movable Contacts: Phosphor bronze with gold plating
Stationary Contacts: Brass with gold plating
Terminals: Brass with gold plating

Environmental Data

Operating Temp Range: –10°C through +70°C (+14°F through +158°F)
Humidity: 90 ~ 95% humidity for 240 hours @ 40°C (104°F)
Vibration: 10 ~ 55Hz with peak-to-peak amplitude of 1.5mm traversing the frequency range & returning in 1 minute; 3 right angled directions for 2 hours
Shock: 50G (490m/s^2) acceleration (tested in 6 right angled directions, with 5 shocks in each direction)

PCB Processing

Soldering: Wave Soldering recommended. See Profile A in Supplement section.
Manual Soldering: 1- & 2-pole: 3 seconds maximum @ 350°C maximum;
4-pole: 4 seconds maximum @ 410°C maximum
Cleaning: Hand clean locally using alcohol based solution.
See Cleaning specifications in Supplement section.

Standards & Certifications

Flammability Standards: UL94V-0 rated housing & base
The D2 Series toggles have not been tested for UL recognition or CSA certification.
These switches are designed for use in a low-current, logic level circuit.
When used as intended in a logic level circuit, the results do not produce hazardous energy.

Distinctive Characteristics

Base of heat resistant resin meets UL94V-0 flammability rating.

Maximized voltage capability of 48V allows use in medium source applications and increases operating life.

Award-winning STC contact mechanism with benefits unavailable in conventional mechanisms: smoother positive detent actuation, increased contact stability, and unparalleled reliability. (Additional STC details under Terms and Acronyms in the Supplement section.)

Round .031″ (0.8mm) diameter PC terminals for easy PCB assembly.

Terminal spacing conforms to standard .100″ (2.54mm) PC board grid spacing.

Molded-in terminals prevent entry of flux, solvents, and other contaminants.

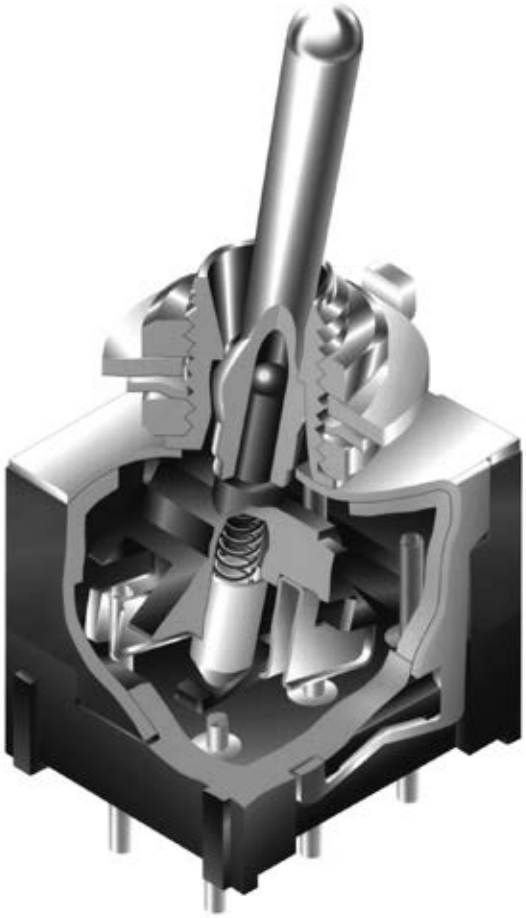

Actual Size

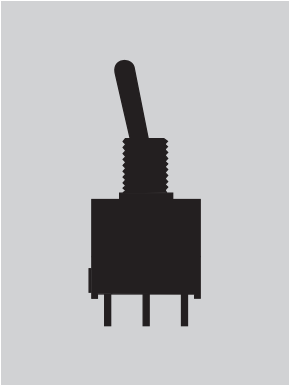

TYPICAL SWITCH ORDERING EXAMPLE

D220 [1] [2] [ ] [P]

Poles	
1	SPDT
2	DPDT
*4	4PDT

* Combines with ON-NONE-ON circuit only & not available with Right Angle

Actuators	
No Code	.413″ (10.5mm) Bat Lever
L	.200″ (5.1mm) Diameter Locking Lever

Circuits			
2	ON	NONE	ON
3	ON	OFF	ON
5	ON	NONE	(ON)
8	(ON)	OFF	(ON)
9	ON	OFF	(ON)

( ) = Momentary

PC Terminals	
P	Straight
*B	Straight with Bracket
*H	Right Angle with Bracket
*V	Vertical with Bracket

*Bracketed models combine with smooth bushings

DESCRIPTION FOR TYPICAL ORDERING EXAMPLE

D22012P

POLES & CIRCUITS

		Toggle Position ( ) = Momentary			Connected Terminals			Throw & Schematics
Pole	Model	Down (Keyway)	Center	Up	Down (Keyway)	Center	Up	Note: Terminal numbers are not actually on the switch.
SP	**D22012** **D22013** **D22015** **D22018** **D22019**	ON ON ON (ON) ON	NONE OFF NONE OFF OFF	ON ON (ON) (ON) (ON)	2-3	OPEN	2-1	SPDT
DP	**D22022** **D22023** **D22025** **D22028** **D22029**	ON ON ON (ON) ON	NONE OFF NONE OFF OFF	ON ON (ON) (ON) (ON)	2-3 5-6	OPEN	2-1 5-4	DPDT 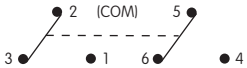
4P	**D22042**	ON	NONE	ON	2-3 5-6 8-9 11-12	OPEN	2-1 5-4 8-7 11-10	4PDT 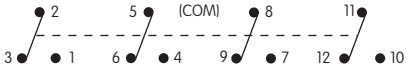

ACTUATORS

No Code **.413" (10.5mm) Bat Lever**

Material:
Chrome over brass

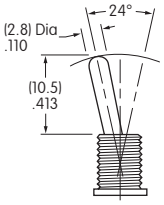

L **.413" (5.1mm) Diameter Locking Lever**

Material:
Chrome over brass

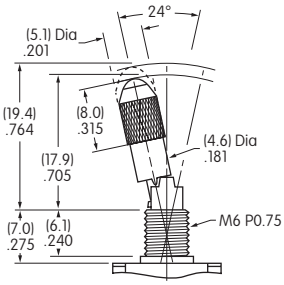

PC TERMINALS

P **Straight**

B **Straight with Bracket**

H **Right Angle with Bracket**

V **Vertical with Bracket**

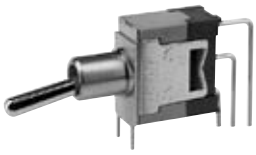

OPTIONAL CAPS & CAP COLORS

AT415
Bat Lever Cap

Material:
Polyethylene

Colors Available:
A B C E F G

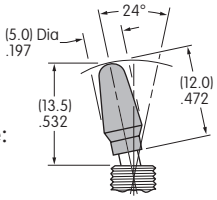

AT444 Bat Lever
Conical Cap

Material:
Polyethylene

Colors Available:
A B C E F G

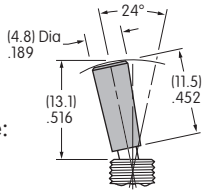

AT427 Cap Supplied with Locking Lever

Material:
Anodized
Aluminum

Colors Available:
A C G

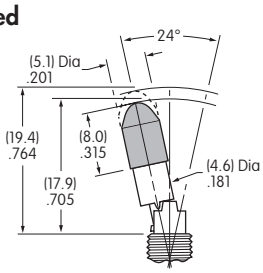

Colors Codes: **A** Black **B** White **C** Red **E** Yellow **F** Green **G** Blue

TYPICAL SWITCH DIMENSIONS

Straight PC • Single Pole

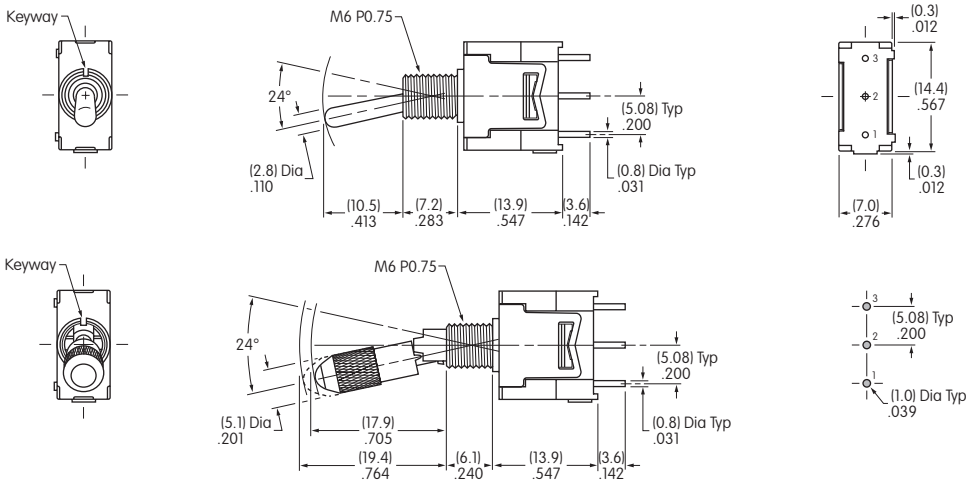

D22012P **D22012LP**

Actuator in Down Position

Straight PC • Double Pole

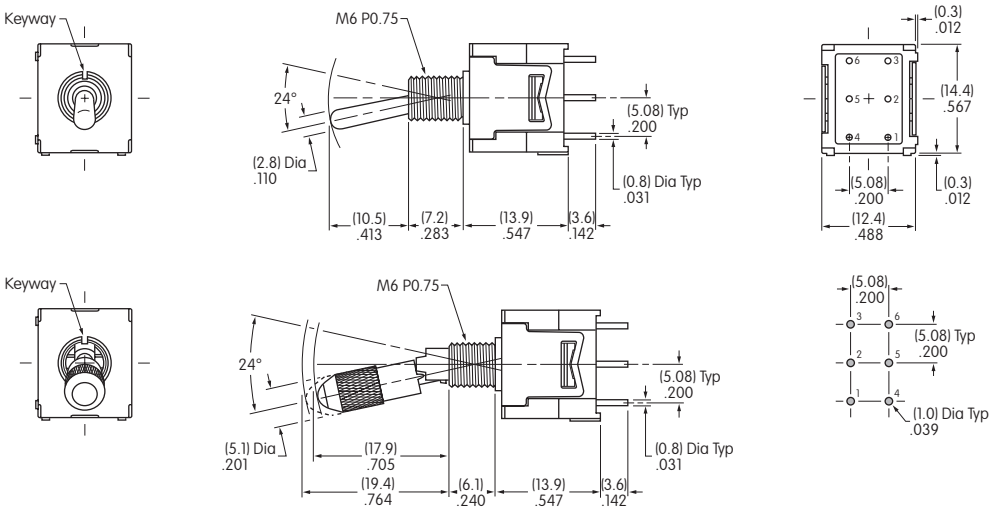

D22022P **D22022LP**

Actuator in Down Position

Straight PC • Four Pole

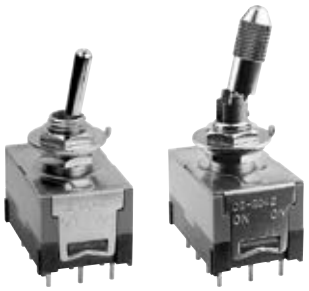

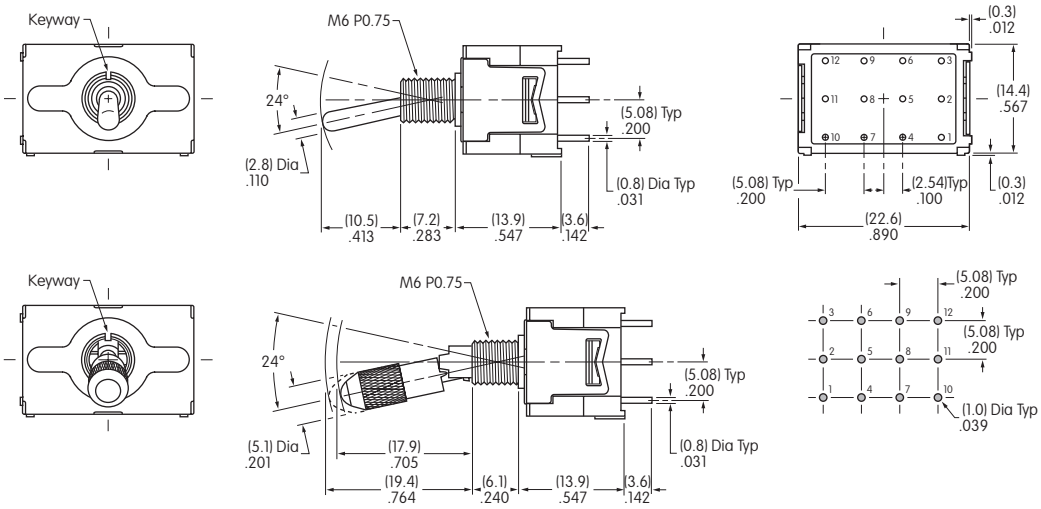

D22042P **D22042LP**

Actuator in Down Position

TYPICAL SWITCH DIMENSIONS

Straight PC • Bracket Single Pole

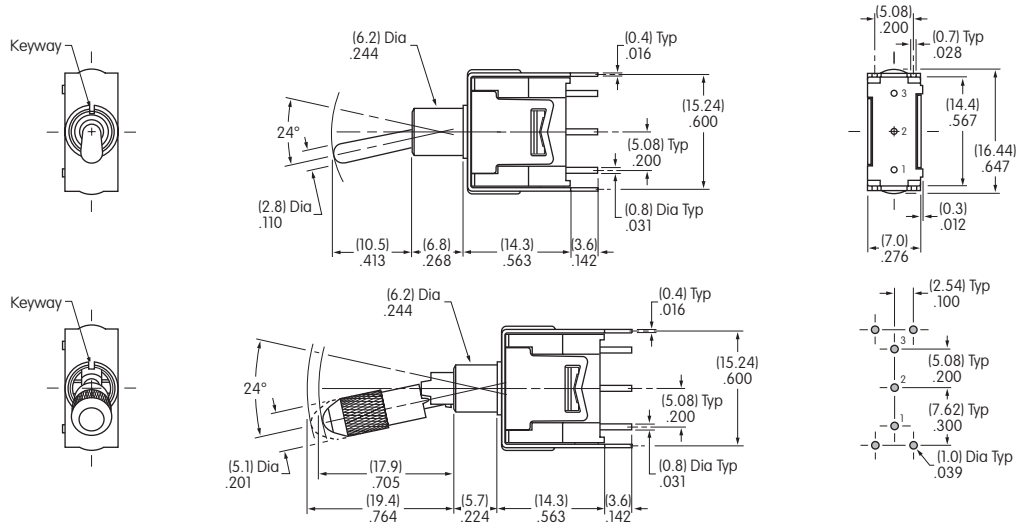

Actuator in Down Position

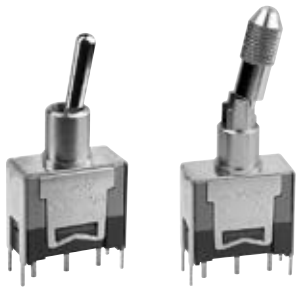

D22012B D22012LB

Straight PC • Bracket Double Pole

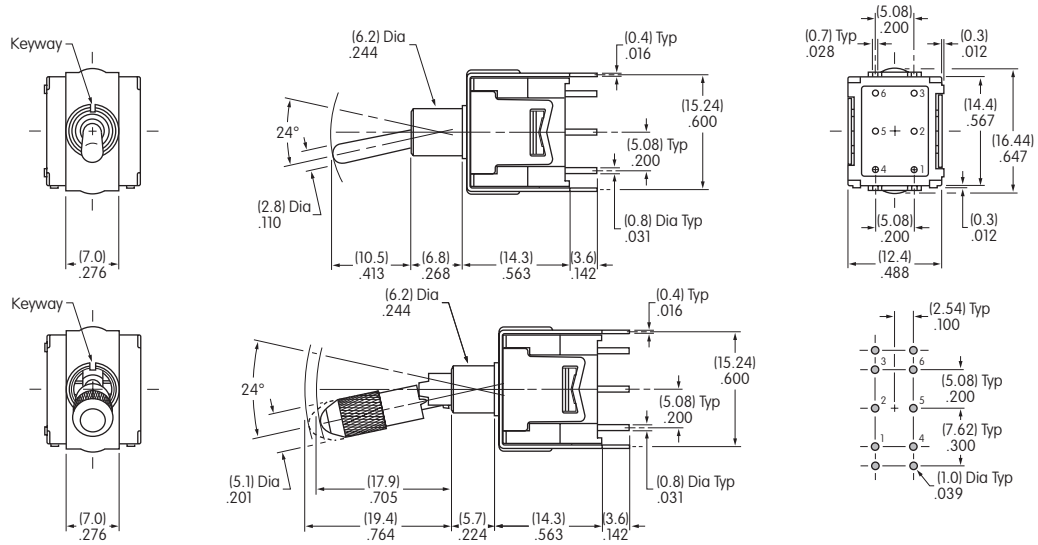

Actuator in Down Position

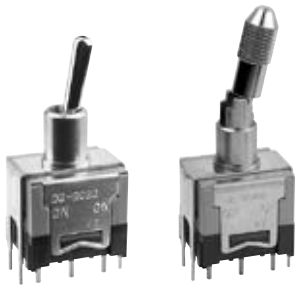

D22022B D22022LB

Straight PC • Bracket Four Pole

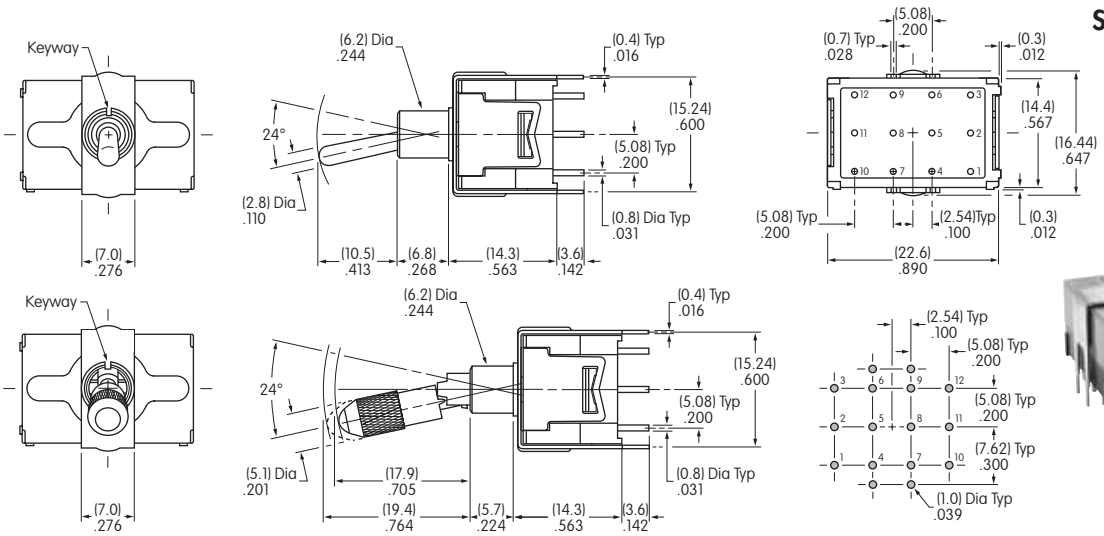

Actuator in Down Position

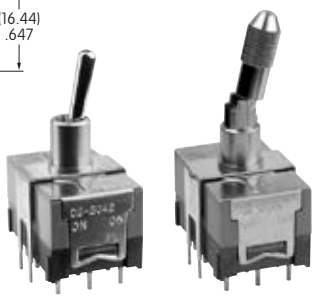

D22042B D22042LB

TYPICAL SWITCH DIMENSIONS

Right Angle PC • Single Pole

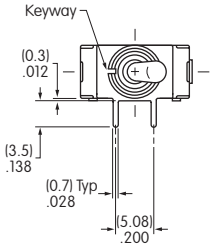

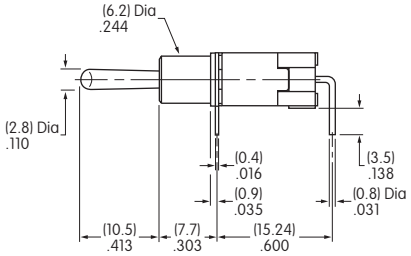

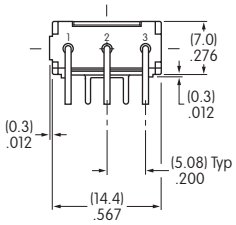

D22012H

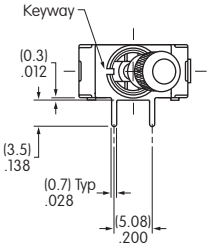

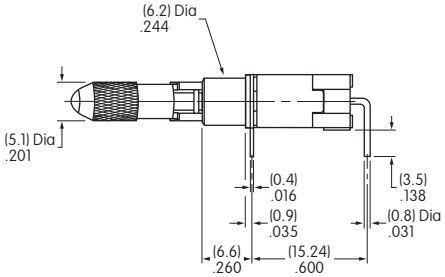

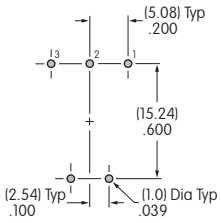

D22012LH

Actuator in Down Position

Right Angle PC • Double Pole

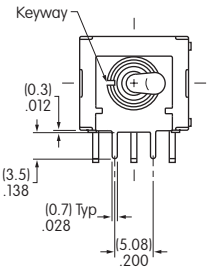

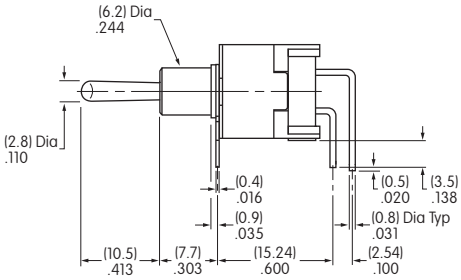

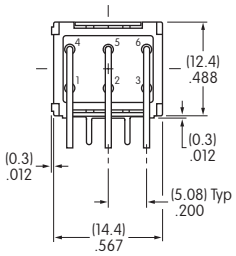

D22022H

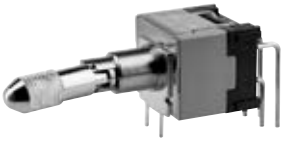

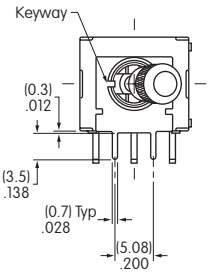

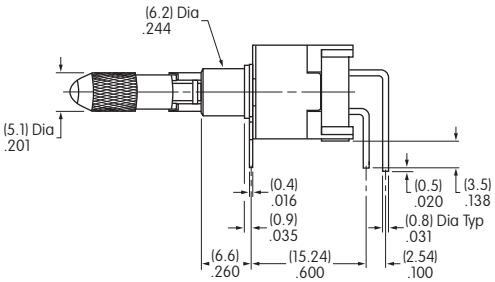

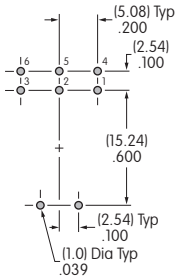

D22022LH

Actuator in Down Position

TYPICAL SWITCH DIMENSIONS

Vertical PC • Single Pole

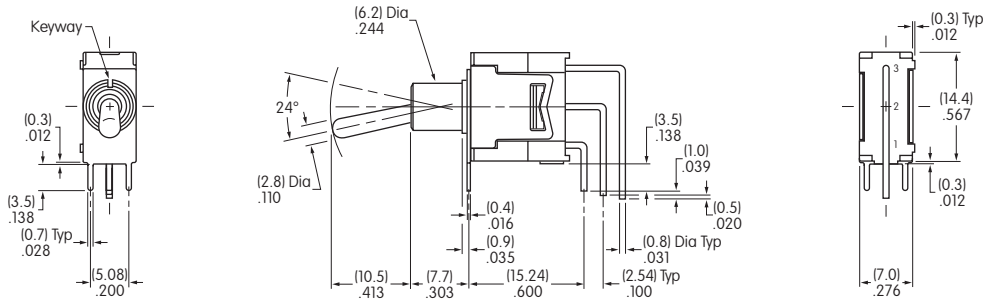

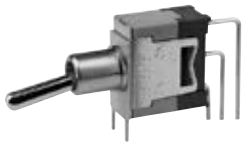

D22012V

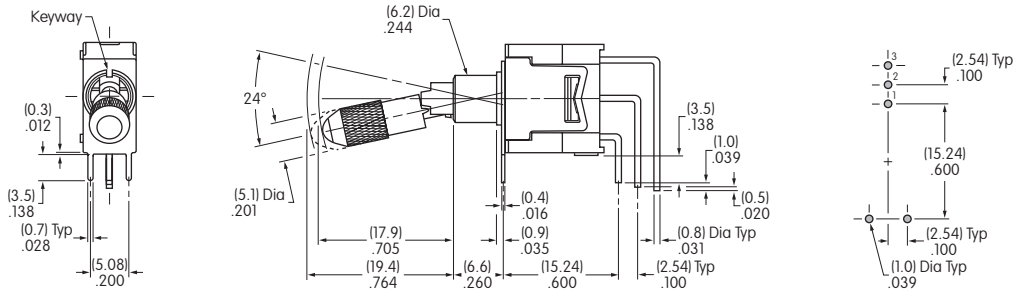

Actuator in Down Position

D22012LV

Vertical PC • Double Pole

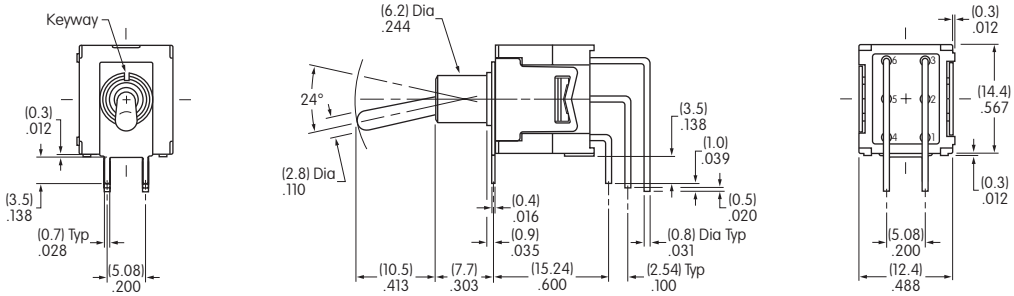

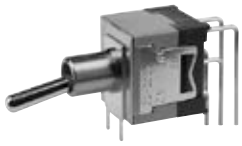

D22022V

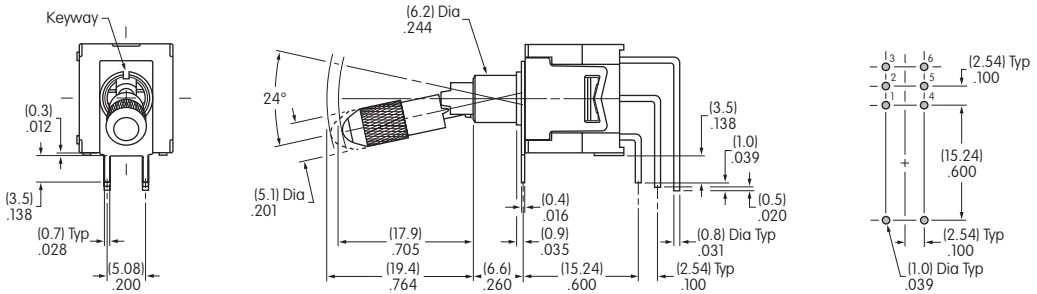

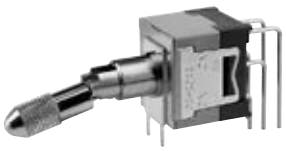

Actuator in Down Position

D22022LV

TYPICAL SWITCH DIMENSIONS

Vertical PC • Four Pole

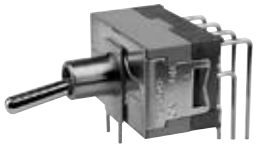

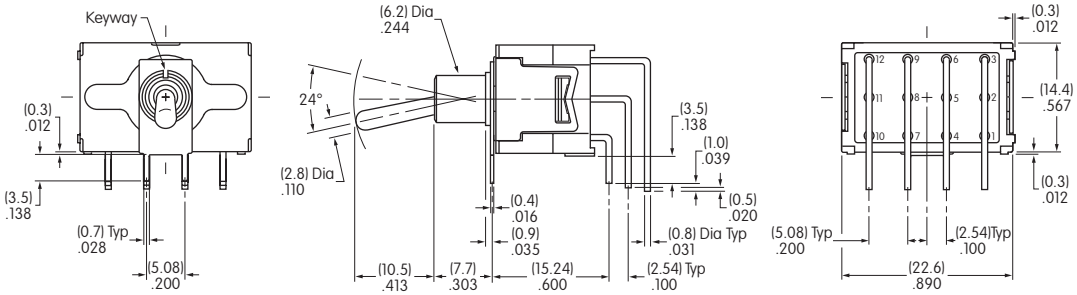

D22042V

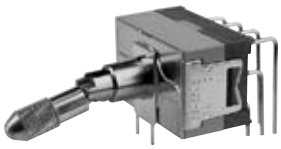

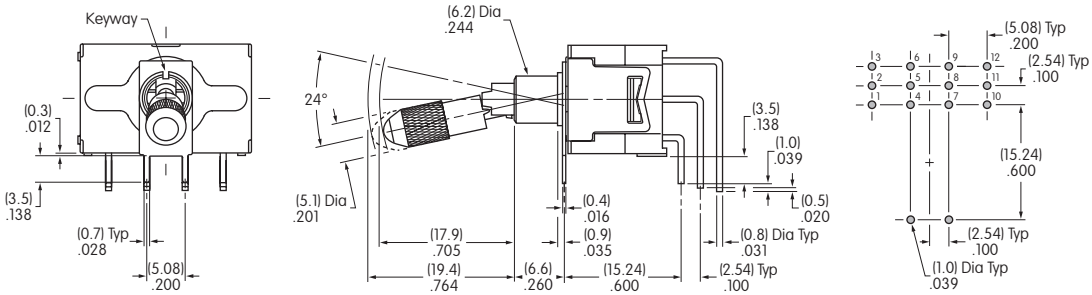

D22042LV

Actuator in Down Position

STANDARD HARDWARE

AT513M
Hex Nut
Brass with nickel plating
2 supplied

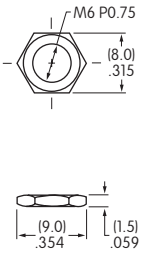

AT507M
Locking Ring
Steel with zinc/chromate
1 supplied

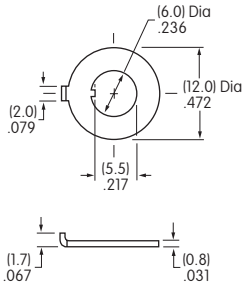

AT509
Lockwasher
Steel with zinc/chromate
1 supplied

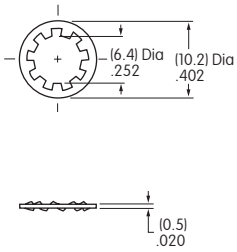

OPTIONAL

AT501M
Knurled Face Nut
Brass with chrome plating

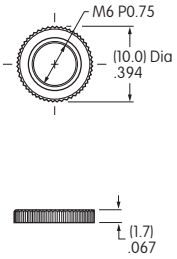

PANEL CUTOUTS & MAXIMUM PANEL THICKNESS

With Standard Hardware

.087″ (2.2mm) for Standard Lever

.051″ (1.3mm) for Locking Lever

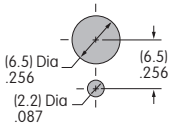

Without Bottom Hex Nut

.154″ (3.9mm) for Standard Lever

.110″ (2.8mm) for Locking Lever

Without Locking Ring

.118″ (3.0mm) for Standard Lever

.083″ (2.1mm) for Locking Lever

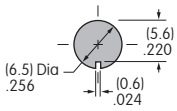

Without Locking Ring & Bottom Hex Nut

.185″ (4.7mm) for Standard Lever

.142″ (3.6mm) for Locking Lever

Mouser Electronics

Authorized Distributor

Click to View Pricing, Inventory, Delivery & Lifecycle Information:

NKK Switches:

D22012B D22022B