THIS DRAWING IS UNPUBLISHED.
VERTRAULICHE UNVEROEFFENTLICHTE ZEICHNUNG
© COPYRIGHT - -

RELEASED FOR PUBLICATION - - -
FREI FUER VEROEFFENTLICHUNG
ALL RIGHTS RESERVED.
ALLE RECHTE VORBEHALTEN.

MATED WITH
PASSEND ZU
-

LOC	DIST
A1	-

PROJEKT NR.: -

REVISIONS
AENDERUNGEN

P	LTR	DESCRIPTION / BESCHREIBUNG	DATE	DWN	APVD
	M9	REVISED PER ECO-11-005150	14APR2011	RK	HMR
	M10	Swage in insulation area section C-C corrected.	01JUN2011	Kirs.	Merz
	M11	929990-4 SUPERSEDED BY 929990-1	17JUN2016	JJH	MC

1 PRE TINNED
vorverzinnt 1-2 µm

2 FINISH: ELECTROPLATED SILVER
Oberflaeche: galvanisch versilbert

ZONE "A": MIN 1-3 µm Ag
min 1-3 µm Ag

ZONE "B": MIN 1-3 µm ELECTROPLATED SN
min 1-3 µm galvanisch Sn

REST: SILVER OR TIN ALLOWED. IN TRANSITION AREAS OVERLAPPING LAYER OR PLAIN SURFACES ARE NOT ALLOWED.
Silber oder Zinn erlaubt. Im Uebergangsbereich sind keine ueberlappenden Schichten oder blanke Stellen erlaubt.

3 PLAIN
blank

4 FINISH: ROLL-CLAD GOLD
Oberflaeche: walzplattiert Gold

ZONE"A": MIN 1.2 µm AuNi5 OVER 10±2 µm Ni INTERFACE LAYER
min 1.2 µm AuNi5 ueber 10±2 µm Zwischenschicht

REST: MIN. 1-2 µm ELECTROPLATED Sn
min. 1-2 µm galvanisch Sn

5 FINISH: ELECTROPLATED GOLD
Oberflaeche: galvanisch vergoldet

ZONE "A": MIN 0.8 µm ELECTROPLATED Au OVER MIN 1.3 µm ELECTROPLATED Ni LAYER AT CONTACT AREA
min 0.8 µm galvanisch Au ueber min 1.3 µm galvanisch Ni Zwischenschicht im Kontaktbereich

ZONE "B": MIN 1-2 µm ELECTROPLATED Sn OVER MIN 0.05 µm ELECTROPLATED Ni LAYER
min 1-2 µm galvanisch Sn ueber min 0.05 µm galvanisch Ni Zwischenschicht

REST: Au, Sn OR Ni SURFACE. NO PLAIN SURFACES ALLOWED.
Au, Sn ober Ni Oberflaeche. Keine blanken Stellen erlaubt.

VERSION A
(UNSEALED / ungedichtet)

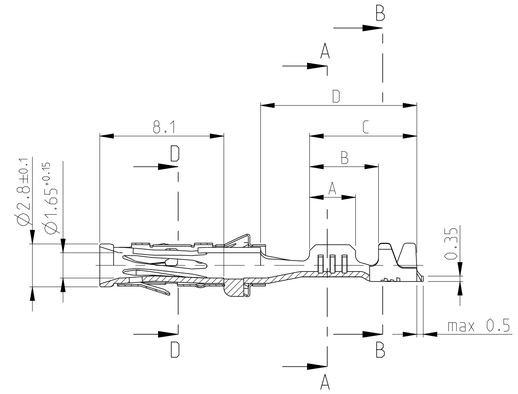

VERSION B
(SINGLE WIRE SEAL-SYSTEM / Einzel-Dichtungs-System)
DGB 0.5 - 2.5 mm

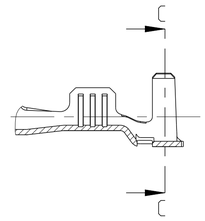

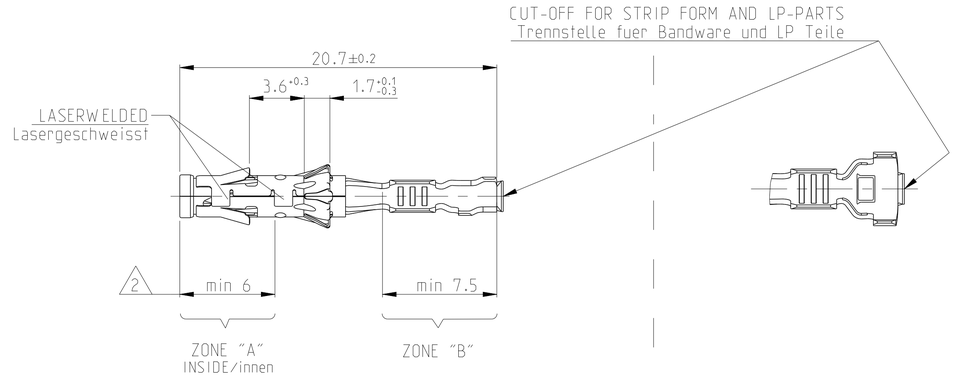

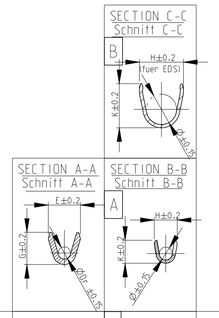

														ORDER-No. SINGLE SEAL Einzeldichtung	ORDER-No. DEAD END PLUG Blindstopfen
Version B (SINGLE WIRE SEAL-SYSTEM/ Einzel-Dichtungs-Sysyem)	1-929990-0	1-962999-0	K	CuNi18Zn20	3	>1.0-2.5 FLR	2.2-3.0	E=3.6 G=3.8 Ø$_{Dr}$=1.7	B H=5.0 K=5.0 Ø=3.6	4	7.2	8.7	10.4	828905-1	828922-1
	929990-7	962999-7	K	CuNiSi	2										
	M11 929990-4 SUPERSEDED BY 929990-1	962999-4	K	CuFe2	1										
	929990-3	-	K	CuNiSi	4										
	929990-1	962999-1	K	CuNiSi	1										
	1-929989-0	1-962998-0	A	CuNi18Zn20	3	0.5-1.0 FLR	1.2-2.1	E=2.6 G=2.8 Ø$_{Dr}$=1.1	B H=4.8 K=4.8 Ø=3.2	3	5.4	7	10.2	828904-1	828922-1
	929989-8	962998-8	A	CuNiSi	5										
	929989-7	962998-7	A	CuNiSi	2										
	929989-4	962998-4	M	CuFe2	1										
	929989-1	962998-1	M	CuNiSi	1										
	929988-4	962997-4	J	CuFe2	1	0.2-0.4 FLR	1.2-2.1	E=2.1 G=2.1 Ø$_{Dr}$=0.8	A H=4.7 K=4.5 Ø=3.2	3	5.4	7	10.2	828904-1	828922-1
	929988-2	962997-2	K	CuNiSi	2										
	929988-1	962997-1	J		1										

Version A (UNSEALED / ungedichtet)	929987-4	962996-4	L	CuFe2	1	>1.0-2.5 FLR	1.9-3.0	E=3.6 G=3.8 Ø$_{Dr}$=1.7	A H=4.3 K=4.5 Ø=2.6	4	5.5	8.5	10.2
	929987-1	962996-1	L	CuNiSi	1								
	929986-4	962995-4	L	CuFe2	1	0.5-1.0 FLR	1.4-2.1	E=2.6 G=2.8 Ø$_{Dr}$=1.1	A H=3.2 K=3.4 Ø=1.8	3	4.5	7	10.2
	929986-1	962995-1	L	CuNiSi	1								
	929985-4	962994-4	J	CuFe2	1	0.2-0.4 FLR	1.15-1.6	E=2.1 G=2.1 Ø$_{Dr}$=0.8	A H=2.5 K=2.5 Ø=1.4	3	4.5	7	10.2
	929985-1	962994-1	J	CuNiSi	1								
	ORDER-NO. STRIP FORM Bandware	ORDER-NO. LOOSE PIECE. Einzelausfuehrung	REV.	MATERIAL Werkstoff	SURFACE Oberflaeche	DGB [mm 2]	ISOL.Ø [mm]	WIRE CRIMP Drahtcrimp	INSUL.-CRIMP Isol.-Crimp	A	B	C	D
								CRIMP DIMENSION (mm) Crimpabmessungen (mm)					

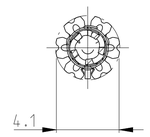

D-D

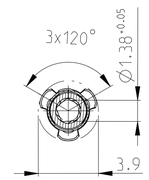

E-E

THIS DRAWING IS A CONTROLLED DOCUMENT.

DIMENSIONS: MASSEINHEITEN: mm

TOLERANCES UNLESS OTHERWISE SPECIFIED: ALLGEMEINTOLERANZEN
0 PLC ±0.15
1 PLC ±
2 PLC ±
3 PLC ±
4 PLC ±
ANGLES/WINKEL ±1.5°

MATERIAL -

FINISH/OBERFLAECHE/FARBE -

DWN	Abraham,G.	17OCT2003
CHK	Goeppel,C.	18OCT2003
APVD	Bleicher,M.	22OCT2003
PRODUCT SPEC PRODUKTSPEZ.	108-18028	
APPLICATION SPEC VERARBEITUNGSSPEZ.	114-18040	
WEIGHT GEWICHT	0.4g	

TE Connectivity

NAME: DIA. 1.5mm SOCKET CONTACT
Dia. 1.5mm Buchsenkontakt
-

SIZE	CAGE CODE	DRAWING NO ZEICHNUNGS-NR.	RESTRICTED TO NUR FUER
A1	00779	C-1355063	-

CUSTOMER DRAWING /KUNDENZEICHNUNG | SCALE MASSSTAB 5:1 | SHEET BLATT 1 OF VON 1 | REV M11

4805 (3/11)

Mouser Electronics

Authorized Distributor

Click to View Pricing, Inventory, Delivery & Lifecycle Information:

TE Connectivity:

1-929989-0