PRODUCT NUMBER ("LF" DENOTES LEAD-FREE)	CONTACT PLATING NOTE	MATING LENGTH, DIM "X"				ROHS COMPATIBILITY
		POSN 1	POSN 2	POSN 3	POSN 4	
10098549-4444P00LF	3	1.10	1.10	1.10	1.10	SEE NOTE 9

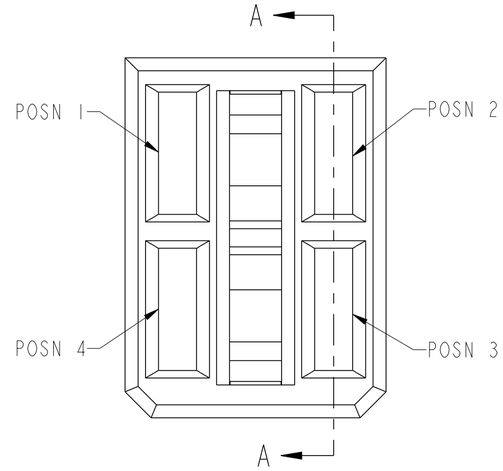

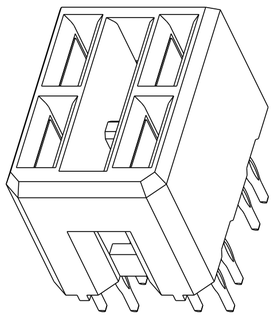

SCALE 4:1

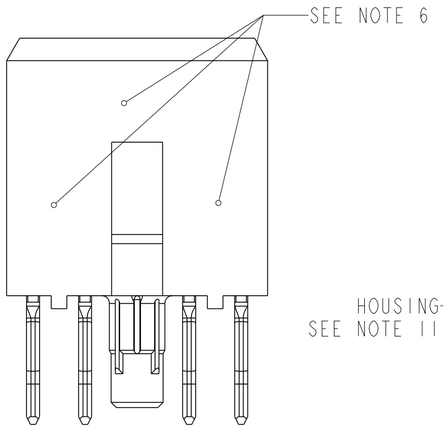

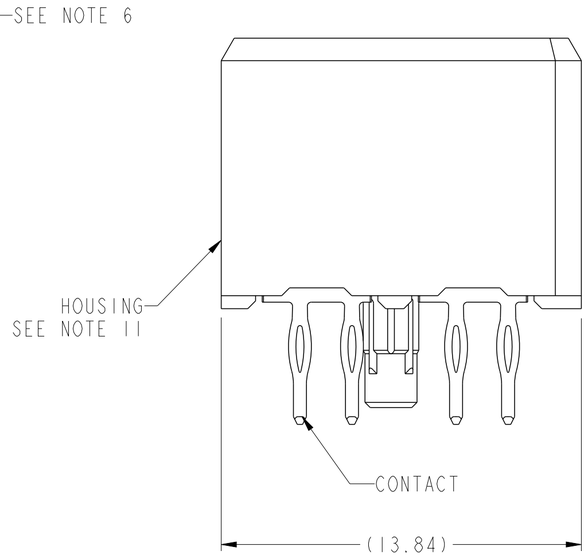

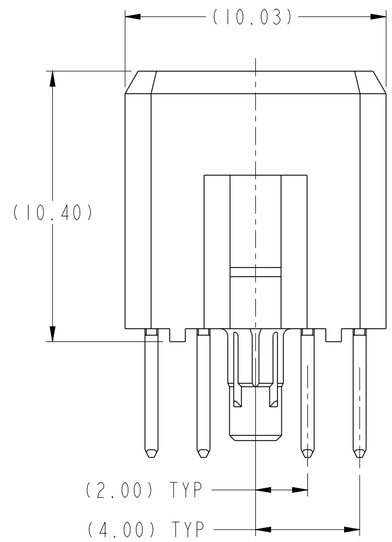

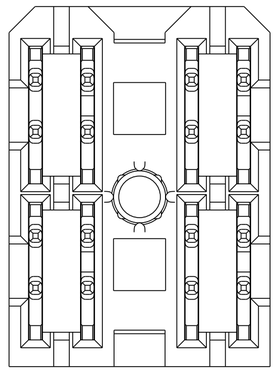

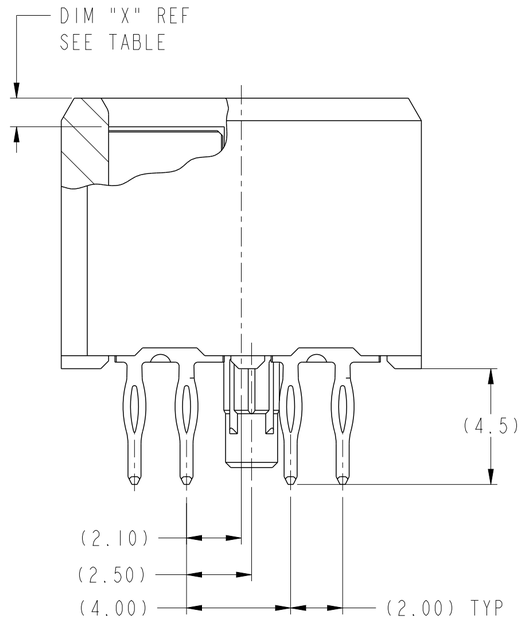

SECTION A-A

spec ref GS-12-220				dr	Chen-Hong Tan	2009/03/23	projection	MM	size A2	scale 6:1
tolerance std ASME Y14.5 -	TOLERANCES UNLESS OTHERWISE SPECIFIED			eng	Jackie Chen	2015/08/17			ecn no	ELX-DG-21664-1
				chr	-	-				
				appr	Pei-Ming Zheng	2015/08/17	product family	2mm High Power	rel level	Released
surface 3.2	linear	0.X	±.3	FCI	title	2x2 VERTICAL RECEPTACLE ASSY AIRMAX POWER	dwg no	10098549	rev B
		0.XX	±.1						
		0.XXX	±.05						
ASME Y14.5	angular	0°	±2°	www.fci.com	cat. no.	-	Product - Customer Drw		sheet 1 of 2

Copyright FCI.

TOP LAYER DESCRIPTION	TABLE I PLATED THROUGH-HOLE REQUIREMENTS							
	DRILLED HOLE DIAMETER	COPPER THICKNESS	TIN-LEAD THICKNESS	NICKEL THICKNESS	GOLD THICKNESS	TIN THICKNESS	SILVER THICKNESS	FINISHED HOLE DIAMETER
TIN-LEAD	0.81-0.86 (0.85 DRILL)	0.025 - 0.050	0.005 - 0.015	--	--	--	--	0.65 - 0.80
IMMERSION TIN	0.81-0.86 (0.85 DRILL)	0.025 - 0.050	--	--	--	0.9 - 1.5um	--	0.70 - 0.80
IMMERSION SILVER	0.81-0.86 (0.85 DRILL)	0.025 - 0.050	--	--	--	--	0.15 - 0.65um	0.70 - 0.80
COPPER (SEE NOTE 12)	0.81-0.86 (0.85 DRILL)	0.025 - 0.050	--	--	--	--	--	0.70 - 0.80
GOLD	0.81-0.86 (0.85 DRILL)	0.025 - 0.050	--	0.003 - 0.007	FLASH UP TO 0.0002	--	--	0.69 - 0.80

NOTES:

1. CONNECTOR MATERIALS:
   HOUSING: HIGH TEMPERATURE THERMOPLASTIC, BLACK UL 94V-0 COMPLIANT
   CONTACT: HIGH PERFORMANCE COPPER ALLOY

2. CONTACT PLATING:
   PRESS-FIT TAIL: NOT APPLICABLE
   SEPARABLE INTERFACE: NOT APPLICABLE

B 3. CONTACT PLATING (LEAD-FREE):
   PRESS-FIT TAIL: 0.5um MIN MATTE TIN OVER NICKEL.
   SEPARABLE INTERFACE: 0.76um MIN GXT OVER NICKEL.

4. PRODUCT SPECIFICATION: GS-12-220

5. APPLICATION SPECIFICATION: GS-20-023

6. PRODUCT MARKING (PRODUCT NUMBER & LOT CODE) ON HOUSING IN AREA SHOWN, EITHER SIDE.

7. MINIMUM NOMINAL BOARD THICKNESS: 2.4mm

8. REFER TO CUSTOMER DRAWING SK100359II FOR INFORMATION REGARDING PCB LAYOUT OF POWER AND GUIDE MODULES RELATIVE TO AIRMAX SIGNAL MODULES.

9. PRODUCT MEETS EUROPEAN UNION DIRECTIVES AND OTHER COUNTRY REGULATIONS AS DESCRIBED IN FCI SPECIFICATION GS-22-008.

10. PACKAGING MEETS FCI SPECIFICATION GS-14-920

11. HOUSING COMPONENT WILL WITHSTAND EXPOSURE TO 260° PEAK TEMPERATURE FOR 60 SECONDS IN A CONVECTION, INFRA-RED OR VAPOR-PHASE REFLOW OVEN.

12. COPPER PLATING THICKNESS AT CENTER OF VIA HOLE CAN BE NO MORE THAN 0.003 LESS THAN OTHER AREAS.

13. A B SYMBOL WILL BE NEXT TO ANY DIMENSION, VIEW OR NOTE WHICH HAS BEEN MODIFIED WITH THE CURRENT DRAWING REVISION

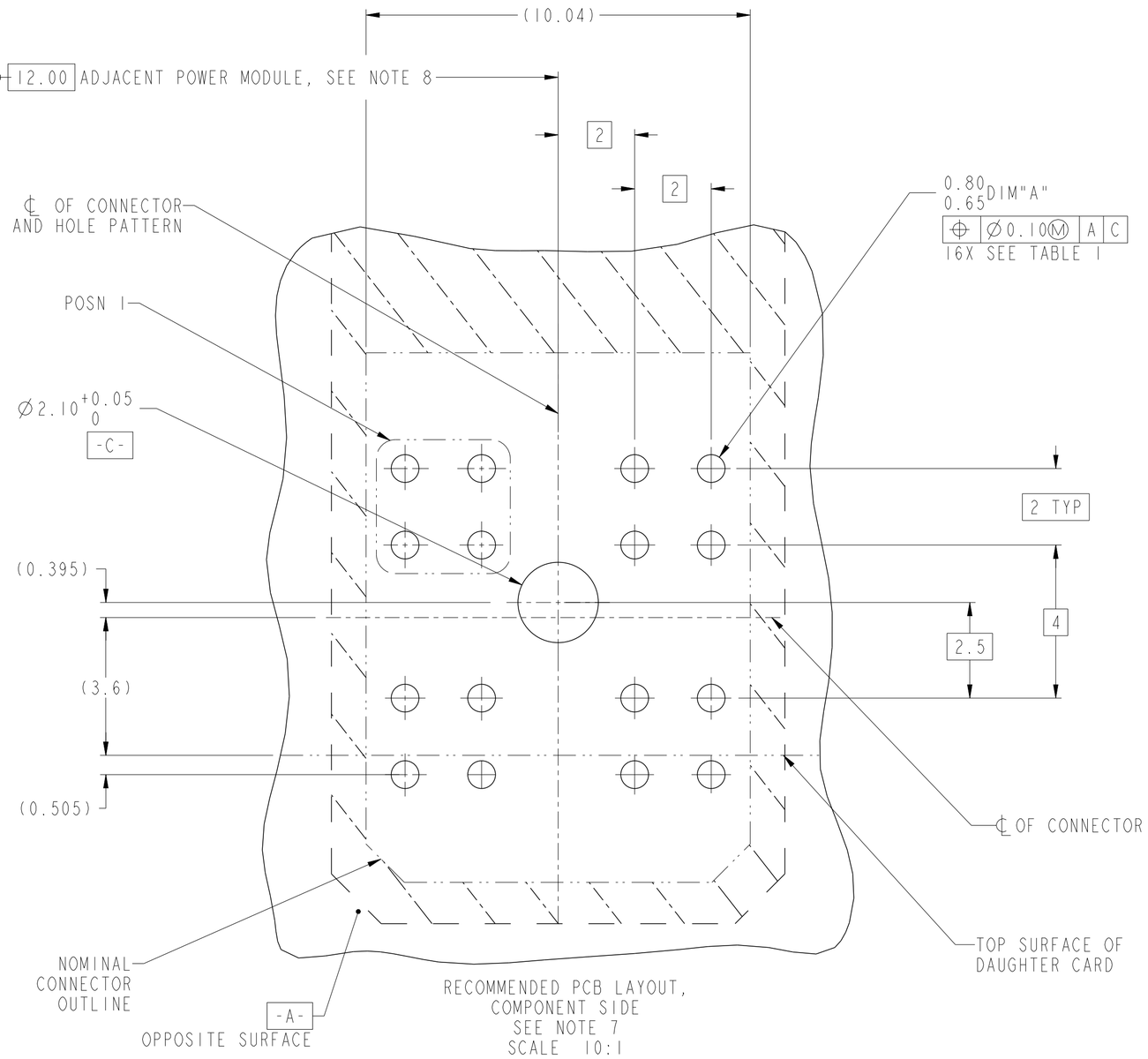

spec ref GS-12-220			dr Chen-Hong Tan 2009/03/23	projection	MM	size A2	scale 3:1
tolerance std ASME Y14.5 -	TOLERANCES UNLESS OTHERWISE SPECIFIED		eng Jackie Chen 2015/08/17			ecn no ELX-DG-21664-1	
			chr - -				
			appr Pei-Ming Zheng 2015/08/17	product family -		rel level Released	
surface - ✓	linear	0.X ±.3	FCI	title 2x2 VERTICAL RECEPTACLE ASSY AIRMAX POWER		dwg no 10098549	rev B
		0.XX ±.1					
		0.XXX ±.05					
ASME Y14.5	angular	0° ±2°	www.fci.com	cat. no. -	Product - Customer Drw		sheet 2 of 2

Copyright FCI.

Mouser Electronics

Authorized Distributor

Click to View Pricing, Inventory, Delivery & Lifecycle Information:

FCI / Amphenol:

10098549-4444P00LF