Apr.1.2020 Copyright 2020 HIROSE ELECTRIC CO., LTD. All Rights Reserved.
In case of consideration for using Automotive equipment / device which demand high reliability, kindly contact our sales window correspondents.

	COUNT	DESCRIPTION OF REVISIONS	BY	CHKD	DATE		COUNT	DESCRIPTION OF REVISIONS	BY	CHKD	DATE
△					. .	△					. .
△					. .	△					. .
△					. .	△					. .

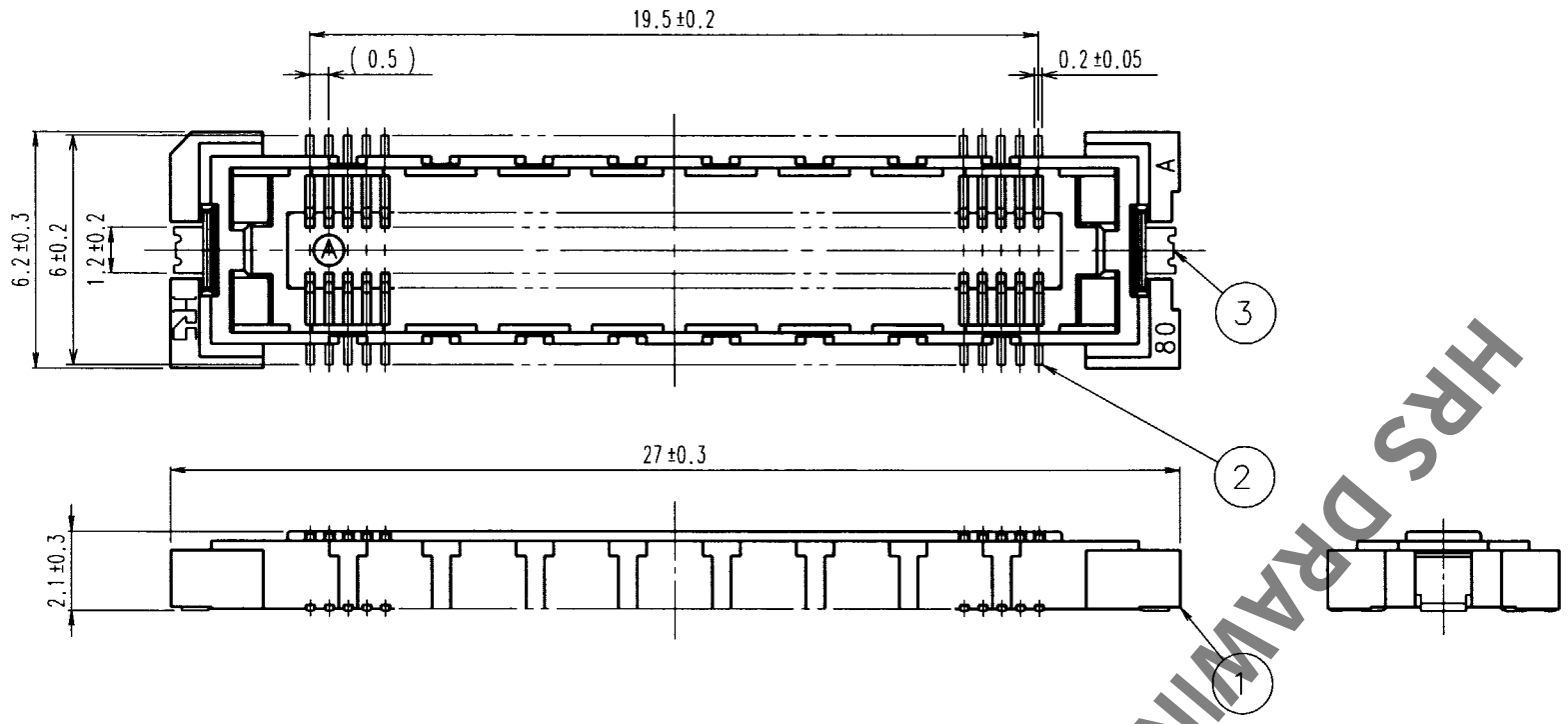

RECOMMENDED LAND PATTERN DIMENSION OF PCB

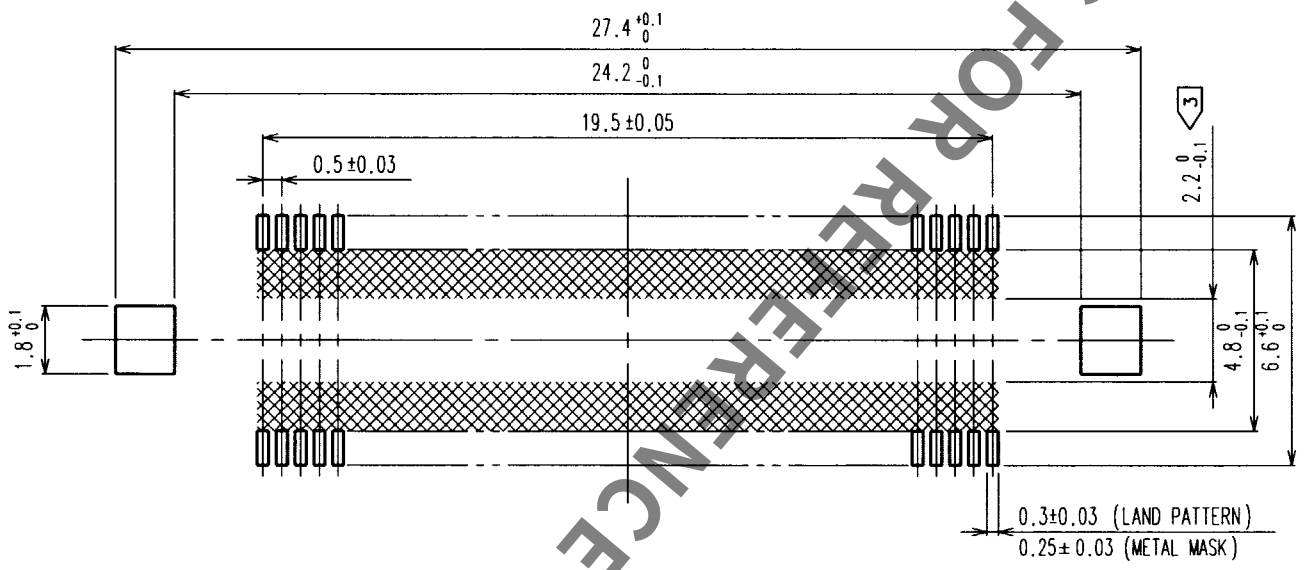

HRS DRAWING FOR REFERENCE

NOTES
1. SMT LEAD-COPLANARITY:0.1 MAX.
2. THIS PRODUCT HAS NO POLARITY TO PATTERN FOR MOUNTING.
3. MAKE SURE WIDTH OF PATTERN IS WITHIN THAT OF LAND ,OR LEAD MAY TOUCH PATTERN.(THIS APPLIES TO HATCHED ▨ AREA.)

NO.	MATERIAL	FINISH, REMARKS	NO.	MATERIAL	FINISH, REMARKS
2	PHOSPHOR BRONZE	CONTACT AREA:GOLD(0.1μm) OVER NICKEL LEAD:GOLD FLASH OVER NICKEL			
1	LCP	BEIGE UL94V-0	3	PHOSPHOR BRONZE	TIN PLATED

CODE NO. (OLD)	DRAWN	DESIGNED	CHECKED	APPROVED	RELEASED
CL	J.Matsukawa 00·04·28	J.Matsukawa 00·04·28	H.Okawa 00·04·28	Y.Yoshimura 00·05·09	

SCALE 5 : 1	DRAWING NO. EDC3-152648	PART NO. FX11B-80S-SV
UNITS mm	HRS HIROSE ELECTRIC CO.,LTD.	CODE NO. CL573-0758-3 1/1

TO PCK

FORM NO.229