THIS COPY IS PROVIDED ON A RESTRICTED BASIS AND IS NOT TO BE USED IN ANY WAY DETRIMENTAL TO THE INTERESTS OF PANDUIT CORP.

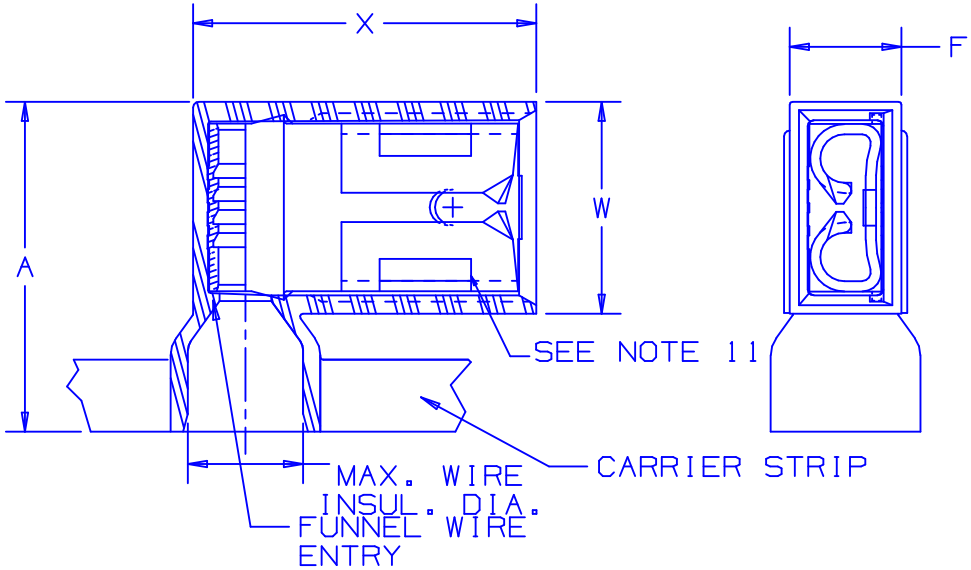

NOTES:

1. RECOMMENDED TOOLS: CP-860, CP-861, CP-851, CP-862
2. APPLICATOR: CA-800 , CA9 ,CA-800EZ
3. CRIMP DIE : CD800-9, CD9-9C
4. VOLTAGE RATING: 600 V MAX.
5. TEMPERATURE RATING: 105° C
6. PACKAGE QUANTITY 1500 PCS/REEL
7. DIMENSIONS ARE IN INCHES (MILLIMETERS)
8. BRASS THICKNESS .018 (.457) TIN PLATED
9. FOR STRANDED COPPER WIRE ONLY
10. HOUSING : TYPE 6/6 NYLON
11. CURL SLOTS: DNFR18205FIB-KD DNFR18206FIB-KD, DNFR14205FIB-KD, DNFR14206FIB-KD ONLY.
12. WIRE STRIP LENGTH: 11/32 $^{+1/32}_{-0}$ (8.7 $^{+0.8}_{-0}$)

PART NUMBER	TAB SIZE	WIRE RANGE	COLOR	MAX. INSUL.	DIMENSIONS			
					A ±.03 (.8)	W ±.01 (.3)	X ±.03 (.8)	F ±.02 (.5)
DNFR18250FIB-KD	.250 X .032	22-18	RED	.178 (4.6)	.57 (14.48)	.37 (9.40)	.60 (15.24)	.21 (5.33)
DNFR18205FIB-KD	.205/.187 X .032	22-18	RED	.178 (4.6)	.57 (14.48)	.37 (9.40)	.60 (15.24)	.21 (5.33)
DNFR18206FIB-KD	.205/.187 X .020	22-18	RED	.178 (4.6)	.57 (14.48)	.37 (9.40)	.60 (15.24)	.21 (5.33)
DNFR14250FIB-KD	.250 X .032	16-14	BLUE	.178 (4.6)	.57 (14.48)	.37 (9.40)	.60 (15.24)	.21 (5.33)
DNFR14205FIB-KD	.205/.187 X .032	16-14	BLUE	.178 (4.6)	.57 (14.48)	.37 (9.40)	.60 (15.24)	.21 (5.33)
DNFR14206FIB-KD	.205/.187 X .020	16-14	BLUE	.178 (4.6)	.57 (14.48)	.37 (9.40)	.60 (15.24)	.21 (5.33)

LISTED 20H3 E78522

CERTIFIED LR31212

DIMENSIONS ARE IN INCHES (MILLIMETERS)

A41124_09

REV	DATE	BY	CHK	DESCRIPTION	ECN #	PM	APP
09	04/14/05	FS		Tolerance of "F" was ±.01 (±.3)			

PANDUIT CORP. TINLEY PARK, ILLINOIS

DISCO-RIGHT ANGLE
FULLY INSULATED FEMALE DISCONNECTS
.250 X .032,.205/.187 X .032/.020

DRAWN BY	CHK'D	SCALE	DRAWING NO./CAD FILENAME
MG		NONE	A41124

Mouser Electronics

Authorized Distributor

Click to View Pricing, Inventory, Delivery & Lifecycle Information:

Panduit:
DNFR14250FIB-KD DNFR18250FIB-KD DNFR14206-FIB-KD DNFR14205FIB-KD DNFR18205FIB-KD DNFR18206FIB-KD