THIS DRAWING IS UNPUBLISHED.
VERTRAULICHE UNVEROEFFENTLICHTE ZEICHNUNG
© COPYRIGHT 2011 -
RELEASED FOR PUBLICATION - - 2011
FREI FUER VEROEFFENTLICHUNG
ALL RIGHTS RESERVED.
ALLE INTERNATIONALEN RECHTE VORBEHALTEN.

MATED WITH:
PASSEND ZU: -

LOC	DIST
A1	-

PROJEKT NR.: -

REVISIONS
AENDERUNGEN

P	LTR	DESCRIPTION BESCHREIBUNG	DATE	DWN	APVD
	A	NEW DRAWING	27JAN2011	GTO	FKA
	A1	NEW DASH NUMBERS ADDED	18OCT2011	GTO	FKA
	A2	ECR-12-011651. OBSOLETE -1, -2. ADD. DIM A	28JUN2012	WMA	FKA
	A3	PACKAGING CHANGE	01DEC2015	AHM	FKA

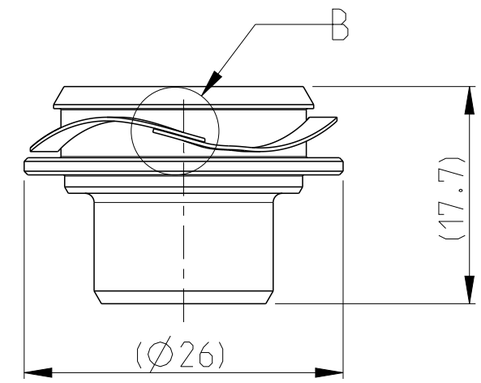

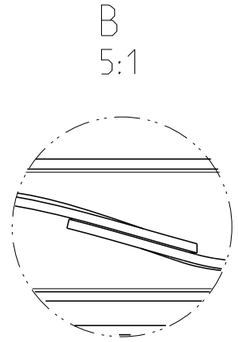

0- ... -1 AS SHOWN

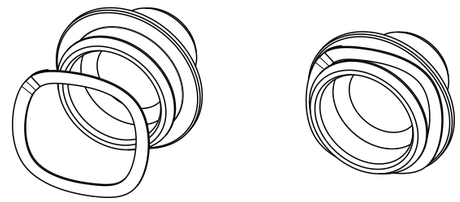

1:1

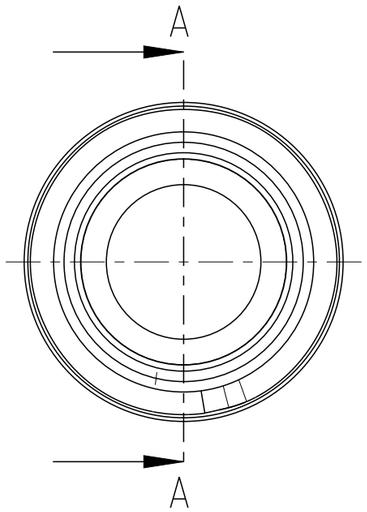

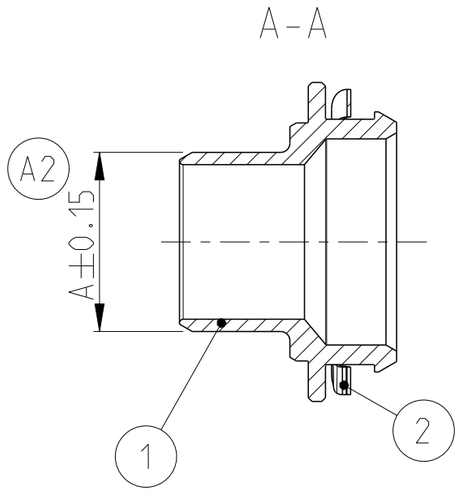

NOTES
Bemerkungen

A3 1 PACKING IN TRAY IN CARTON
Verpackung im Kunststofftraeger im Karton

A3

	ASSY PN	DIMENSION A	TE PN.	TITLE	MATERIAL	SURFACE	QUANTITY	POSITION
	0-2141809-4	14.0±0.15	0-2141820-2	PRESSURE SPRING CONTACT, SPRING	STAINLESS STEEL	Ag	1	2
			0-2141811-2	ADAPTER SHIELD BODY	AL	BLANK	1	1
	0-2141809-3	14.6±0.15	0-2141820-2	PRESSURE SPRING CONTACT, SPRING	STAINLESS STEEL	Ag	1	2
			0-2141811-1	ADAPTER SHIELD BODY	AL	BLANK	1	1
OBSOLETE	0-2141809-2	14.0±0.15	~~0-2141820-1~~	~~PRESSURE SPRING CONTACT, SPRING~~	~~STAINLESS STEEL~~	~~BLANK~~	~~1~~	~~2~~
			~~0-2141811-2~~	~~ADAPTER SHIELD BODY~~	~~AL~~	~~BLANK~~	~~1~~	~~1~~
OBSOLETE	0-2141809-1	14.6±0.15	~~0-2141820-1~~	~~PRESSURE SPRING CONTACT, SPRING~~	~~STAINLESS STEEL~~	~~BLANK~~	~~1~~	~~2~~
			~~0-2141811-1~~	~~ADAPTER SHIELD BODY~~	~~AL~~	~~BLANK~~	~~1~~	~~1~~

THIS DRAWING IS A CONTROLLED DOCUMENT.
DIESES ZEICHNUNGSDOKUMENT WIRD DURCH AMP INCORPORATED KONTROLLIERT.
AENDERUNGEN, DIE DEM TECHNISCHEN FORTSCHRITT DIENEN, SIND VORBEHALTEN.
DEN JEWEILS LETZTGUELTIGEN AENDERUNGSSTAND ERFAHREN SIE AUF ANFRAGE.

DIMENSIONS:
MASSEINHEITEN:
MM

TOLERANCES UNLESS OTHERWISE SPECIFIED:
ALLGEMEINTOLERANZEN

0 PLC	±
1 PLC	±
2 PLC	±
3 PLC	±
4 PLC	±
ANGLES/WINKEL	±

MATERIAL -

FINISH/OBERFLAECHE/FARBE -

TOLERANCING ISO 8015
TOLERIERUNG ISO 8015

DWN	S.Avdovic	15NOV2010
CHK	U.Hoeppner	15NOV2010
APVD	F.Kaehny	15NOV2010

PRODUCT SPEC
PRODUKTSPEZ.
-

APPLICATION SPEC
VERARBEITUNGSSPEZ.
-

WEIGHT
GEWICHT -

TE Connectivity

NAME
CONTACT KIT BODY AND SPRING ASSY
Schirmbuchse und Wellfeder Assy
-

SIZE	CAGE CODE	DRAWING NO ZEICHNUNGS-NR.	RESTRICTED TO NUR FUER
A3	00779	C-2141809	-

CUSTOMER DRAWING /KUNDENZEICHNUNG

SCALE MASSSTAB	SHEET BLATT	OF VON	REV
2:1	1	1	A3

1470-19 (3/11)

Mouser Electronics

Authorized Distributor

Click to View Pricing, Inventory, Delivery & Lifecycle Information:

TE Connectivity:

2141809-3