THIS DRAWING IS UNPUBLISHED. RELEASED FOR PUBLICATION - ,- .
© COPYRIGHT - By - ALL RIGHTS RESERVED.

REVISIONS

P	LTR	DESCRIPTION	DATE	DWN	APVD
	L1	REVISED PER ECO-11-004917	11MAR11	RK	HMR
	M	REVISED PER ECO-17-002212	10APR2017	RS	MM

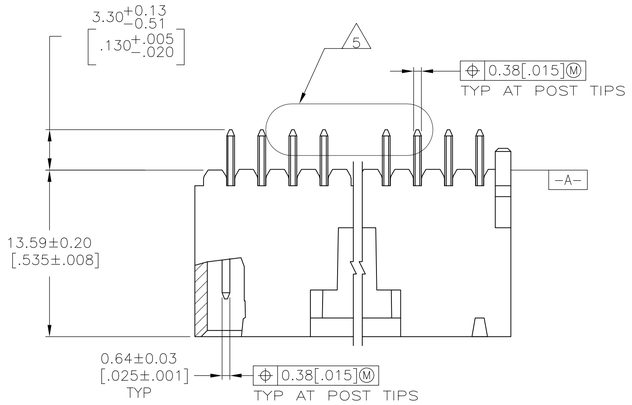

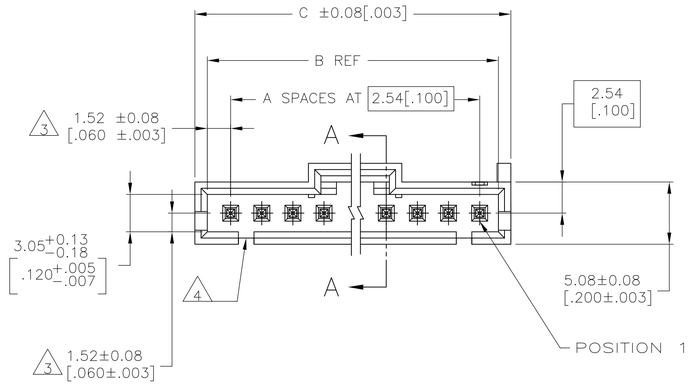

DETAIL Z
POST DETAIL TYP
2 POST MINIMUM

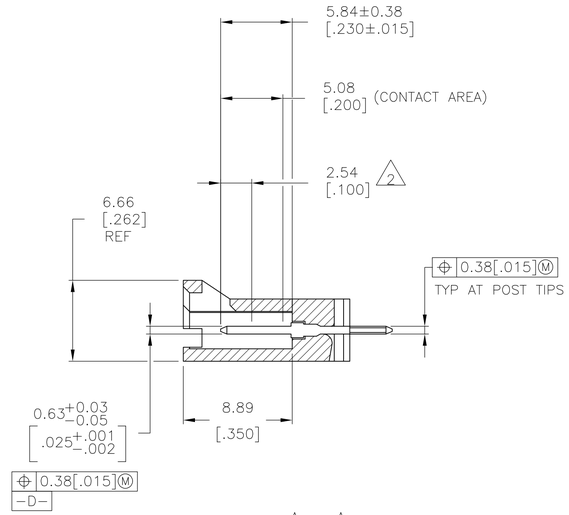

SECTION A—A

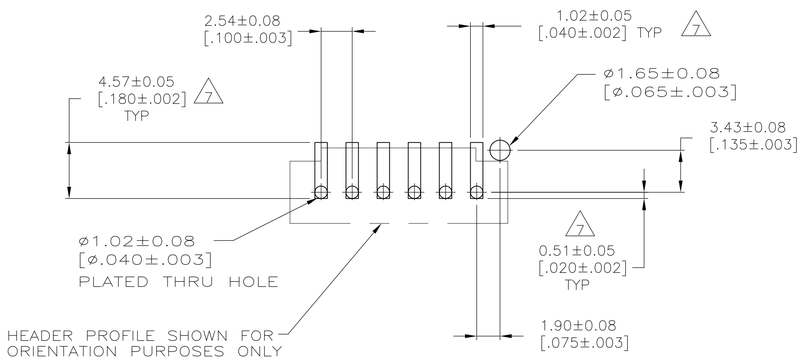

RECOMMENDED PC BOARD MOUNTING DIMENSIONS
RECOMMENDED STENCIL THICKNESS = 0.25[.010]

1. FINISH: .00038[.000015] GOLD IN THE CONTACT AREA, .00254[.000100] MATTE TIN-LEAD ON REMAINDER OF CONTACT, ALL OVER .00127[.000050] NICKEL.
2. POINT OF MEASUREMENT FOR PLATING THICKNESS.
3. THE NOTED DIMENSIONS APPLY FROM THE BASIC DIMENSION CENTER LINE (NOT THE POST CENTER LINE) TO THE SURFACE INDICATED.
4. ONE POLARIZATION SLOT FOR 2 AND 3 POSITION ASSEMBLIES ONLY.
5. SELECT POST TAILS FORMED TO PROVIDE CONNECTOR HOLD DOWN UNTIL SOLDERED, CONFIGURATION ACCEPTS 0.69[.027]–2.03[.080] THICK PRINTED CIRCUIT BOARD. (SEE DETAIL Z).
6. PARTS ARE PACKAGED IN GANG OF TUBES.
7. DIMENSIONS NOTED ARE FOR SOLDER STENCIL LAYOUT FOR USE WITH 1.58±0.20[.062±.008] THICK PRINTED CIRCUIT BOARDS.
8. MATERAIL– HOUSING: LCP, COLOR–BLACK.
   POSTS: BRASS.
9. FINISH: .00038[.000015] GOLD IN THE CONTACT AREA, .00254[.000100] MATTE TIN ON REMAINDER OF CONTACT, ALL OVER .00127[.000050] NICKEL.

PLATING	C	B	A	NO. OF POSN	PART NO.
9	32.89 [1.295]	30.99 [1.220]	11	12	6-104809-1
9	30.35 [1.195]	28.45 [1.120]	10	11	6-104809-0
9	27.81 [1.095]	25.91 [1.020]	9	10	5-104809-9
9	25.27 [.995]	23.37 [.920]	8	9	5-104809-8
9	22.73 [.895]	20.83 [.820]	7	8	5-104809-7
9	20.19 [.795]	18.29 [.720]	6	7	5-104809-6
9	17.65 [.695]	15.75 [.620]	5	6	5-104809-5
9	15.11 [.595]	13.21 [.520]	4	5	5-104809-4
9	12.57 [.495]	10.67 [.420]	3	4	5-104809-3
9	10.03 [.395]	8.13 [.320]	2	3	5-104809-2
9	7.49 [.295]	5.59 [.220]	1	2	5-104809-1
1	32.89 [1.295]	30.99 [1.220]	11	12	1-104809-1
1	30.35 [1.195]	28.45 [1.120]	10	11	1-104809-0
1	27.81 [1.095]	25.91 [1.020]	9	10	104809-9
1	25.27 [.995]	23.37 [.920]	8	9	104809-8
1	22.73 [.895]	20.83 [.820]	7	8	104809-7
1	20.19 [.795]	18.29 [.720]	6	7	104809-6
1	17.65 [.695]	15.75 [.620]	5	6	104809-5
1	15.11 [.595]	13.21 [.520]	4	5	104809-4
1	12.57 [.495]	10.67 [.420]	3	4	104809-3
1	10.03 [.395]	8.13 [.320]	2	3	104809-2
1	7.49 [.295]	5.59 [.220]	1	2	104809-1

THIS DRAWING IS A CONTROLLED DOCUMENT.

DIMENSIONS: mm [INCHES]

TOLERANCES UNLESS OTHERWISE SPECIFIED:
0 PLC ± –
1 PLC ± –
2 PLC ± 0.13[.005]
3 PLC ± –
4 PLC ± –
ANGLES ± –

MATERIAL: SEE NOTE 8
FINISH: SEE TABLE

DWN R BROWN 09FEB01
CHK K WRIGHT 09FEB01
APVD K WRIGHT 09FEB01
PRODUCT SPEC —
APPLICATION SPEC —
WEIGHT —

TE Connectivity

NAME: PLZD HDR ASSY, AMPMODU MTE, VERTICAL SINGLE ROW, 2.54[.100] CL, 0.64[.025] SQ POSTS, WITH LATCHING & HOLD DOWN

SIZE A1 | CAGE CODE 00779 | DRAWING NO C-104809 | RESTRICTED TO —

CUSTOMER DRAWING | SCALE 4:1 | SHEET 1 OF 1 | REV M

4805 (1/15)

Mouser Electronics

Authorized Distributor

Click to View Pricing, Inventory, Delivery & Lifecycle Information:

TE Connectivity:

104809-7