NOTE:

REFERENCE STANDARD IEC60169-4

1. ELECTRIC PERFORMANCE
   - NOMINAL IMPEDANCE (Ω) : 50
   - FREQUENCY RANGE : DC-6 GHz
   - VSWR : ≤ 1.10
   - PIM(dBm): : ≤-160 (2 X 43 dBm)
   - INSERTION LOSS : ≤ 0.05
   - INSULATION RESISTANCE (MΩ) : >10000
   - PROOF VOLTAGE (V) : 1500
   - CONDUCTOR RESISTANCE (mΩ) : OUTER CONDUCTOR <0.2
     INNER CONDUCTOR <0.8

II. MECHANICAL PERFORMANCE
   - RETENTION : ≥5.88N
   - MECHANICAL WEAR(HYPO-) : 500
   - TENSILE FORCE (CABLE-CONNECTOR) : 150N
   - TORSION (CABLE-CONNECTOR) : 0.3N.m

III. MATERIAL AND PLATING
   - INNER CONDUCTOR : SPRING COPPER PLATING Ag5 μm
   - OUTER CONDUCTOR : BRASS PLATING COPPER-TIN-ZINC 2 μm
   - NUT : BRASS PLATING COPPER-TIN-ZINC 2 μm
   - O-RING : SILICONE RUBBER
   - INSULATOR : PTFE

IV. ENVIRONMENT
   - TEMP RANGE : -55 °C TO +155 °C
   - WEATHER STANDARD : IEC 60068 55/155/56
   - THERMAL SHOCK : US MIL-STD 202.METH.107.COND.B
   - VIBRATION : US MIL-STD 202.METH.204.COND.B
   - SHOCK : US MIL-STD 202.METH.213.COND.I

V. ASSEMBLY : INNER AND OUTER CONDUCTOR SOLDERED

VI. ROHS COMPLIANT.

272158-11	REVISIONS				
DRAWING NO.	REV	DESCRIPTION	DATE	ECO	APPR
THIRD ANGLE PROJ.	A	RELEASE TO MFG	17-Feb-12	--	MG
	B	DESCRIPTION CHANGED & MODEL UPDATED	12-Oct-12	2392	MG

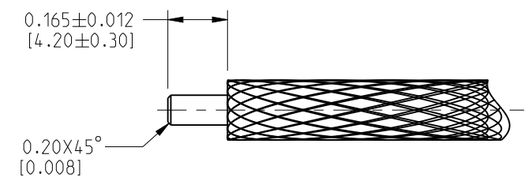

RECOMMENDED CABLE STRIPPING DIMENSIONS

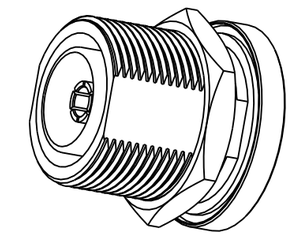

SCALE 1.000

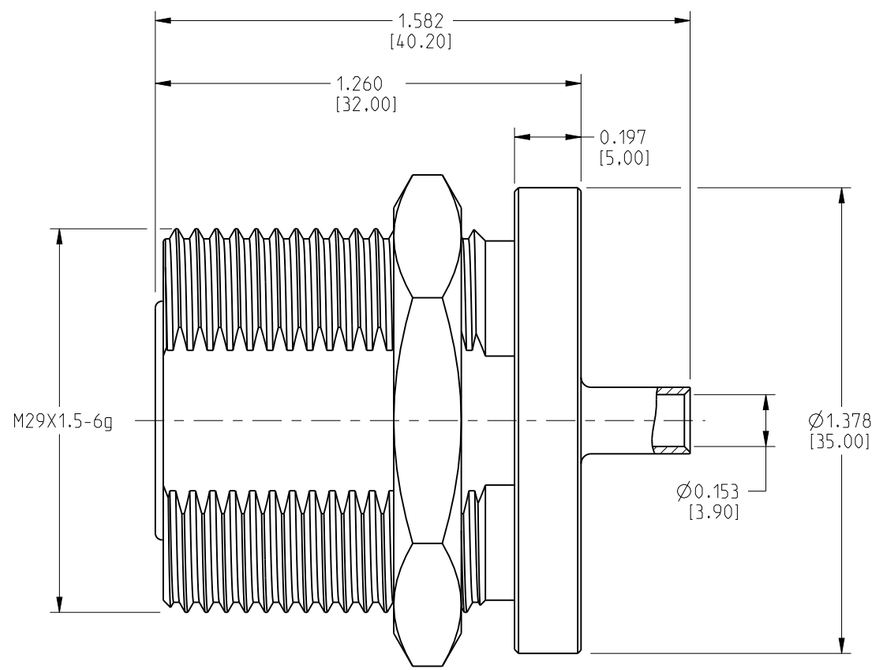

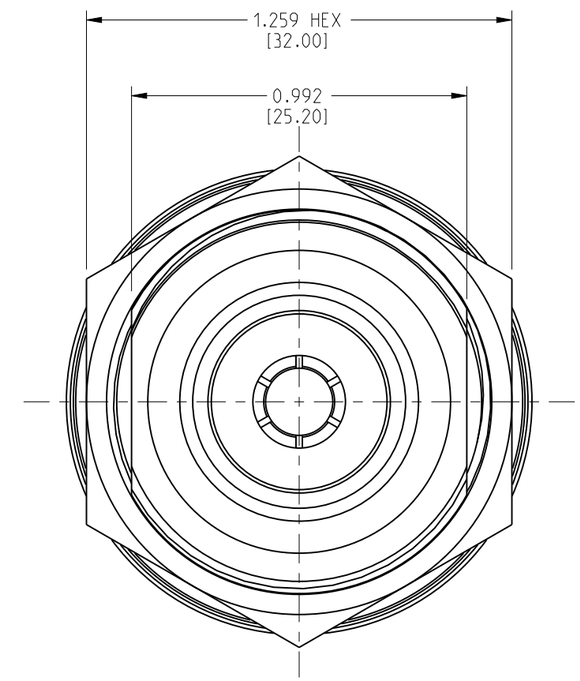

NO	DESCRIPTION	MATERIAL	FINISH	QTY
5	BULKHEAD NUT	BRASS	NICKEL	1
4	O-RING	SILICON RUBBER		1
3	CONTACT PIN	SPRING BRONZE	SILVER	1
2	INSULATOR	PTFE	NATURAL	1
1	BODY	BRASS	WHITE BRONZE	1

UNLESS OTHERWISE SPECIFIED, DIMENSIONS ARE IN INCHES AND TOLERANCES ARE:
2 PLACE DECIMAL ±.015 (0,381 mm) | 3 PLACE DECIMAL ±.005 (0,127 mm) | ANGLES ± 1°

NOTICE - These drawings, specifications, or other data (1) are, and remain the property of Amphenol Corp. (2) must be returned upon request; and (3) are confidential and not to be disclosed to any person other than those to whom they are given by Amphenol Corp. The furnishing of these drawings, specifications, or other data by Amphenol Corp., or to any other person to anyone for any purpose is not to be regarded by implication or otherwise in any manner licensing, granting rights or permitting such holder or any other person to manufacture, use or sell any product, process or design, patented or otherwise, that may in any way be related to or disclosed by said drawings, specifications, or other data.

MATERIAL: SEE NOTES

REFERENCE:

DRAWN: GOPI M	DATE: 12-Oct-12	
ENGINEER: GOPI M	DATE: 12-Oct-12	
APPROVED	DATE	
CAD FILE		

TITLE: 7/16 BULKHEAD JACK FOR 0.141" SEMI-RIGID CABLE

Amphenol Connex

SCALE: 2.2:1 | SHEET 1 OF 1

DWG SIZE: B | DRAWING NO. 272158-11 | REV B

Mouser Electronics

Authorized Distributor

Click to View Pricing, Inventory, Delivery & Lifecycle Information:

Amphenol:
272158-11