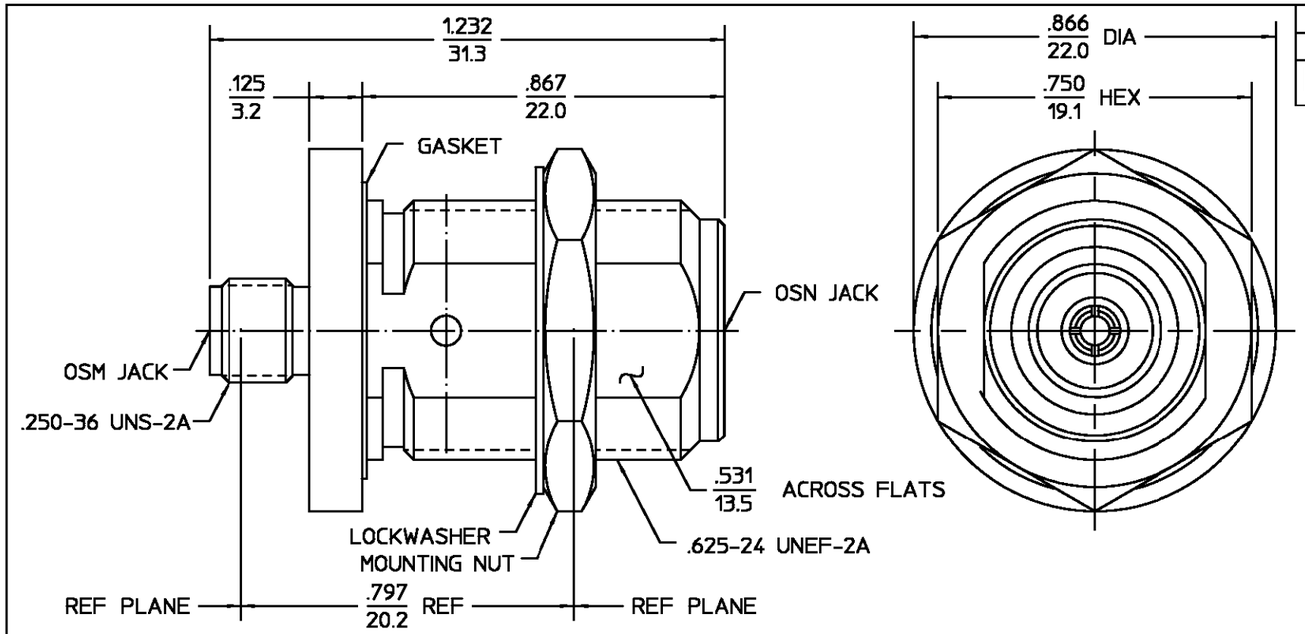

REVISIONS			
REV	DESCRIPTION	DATE	APPROVED
B1	REVISED PER ECO-11-005294	14APR11	HMR

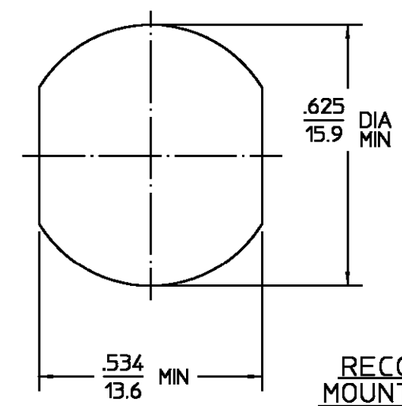

RECOMMENDED MOUNTING HOLE

ELECTRICAL	MECHANICAL	ENVIRONMENTAL
Nominal Impedance (Ohms) 50	Interface Dimensions MIL-STD-348A, Fig. 310.2 (OSM) & 304.2 (N)	Temperature Rating -65°C to +125°C
Frequency Range (GHz) DC to 15	Recommended Mating Torque:	Vibration MIL-STD-202, Method 204, Condition B
Volt Rating (VRMS MAX) @ Sea Level 335	OSM: 7-10 in-lbs	Shock MIL-STD-202, Method 213, Condition I.
VSWR DC - 12.4GHz: 1.06+.005f(GHz) MAX	Type N: 12-15 in-lbs	Thermal Shock MIL-STD-202, Method 107, Condition C,
12.4 - 15.0GHz: .83+.023f(GHz) MAX	Mating Characteristics:	except high temp shall be +115°C
Insertion Loss (dB MAX) .18 @ 9GHz	OSM-Insertion (MAX lbs) 3.0	Moisture Resistance MIL-STD-202, Method 106
RF Leakage (dB MIN) -65 @ 2-3 GHz	Type N-Insertion (MAX lbs) 2.0	Corrosion - MIL-STD-202, Method 101, Condition B, 5% salt spray
Corona, 70,000 Ft (VRMS MIN) 250	OSM-Withdrawal (MIN oz) 1.0	
Dielectric Withstanding Voltage (VRMS MIN) @ Sea Level 1,000	Type N-Withdrawal (MIN oz) 2.0	
Contact Resistance (Milliohms MAX)	Force to Engage and Disengage	
Center Contact 4.1	OSM (in-lbs MAX) 2.0	
Outer Contact 2.2	Type N (in-lbs MAX) 6.0	
Cable to Housing N/A	Center Contact Captivation	
RF High Potential @ Sea Level	Axial (lbs) 6.0	
(VRMS MIN @ 5 MHz) 1,000	Radial (in-oz) 4.0	
I.R.(Megohms MIN) 5,000	Cable Retention	
	Axial Force (lbs) N/A	
	Torque (in-oz) N/A	
	Weight (Grams) TBD	

.XXX = in
XX.X = mm

COMPONENT	MATERIAL	FINISH
HOUSING MOUNTING NUT LOCKWASHER	STAINLESS STEEL PER ASTM-A484 AND ASTM-A582, TYPE 303	PASSIVATE PER ASTM-A380
DIELECTRIC	TFE FLUOROCARBON PER ASTM-D-1457	N/A
CENTER CONTACT	BRASS PER ASTM-B-16, HALF HARD	GOLD PLATE PER MIL-G-45204
GASKET	SILICONE RUBBER PER ZZ-R-765	N/A

UNLESS OTHERWISE SPECIFIED DIMENSIONS ARE IN INCHES
TOLERANCE ON
FRAC. ± 1/64 DEC. ±.005 ANGLES ± 1°

DRAWN BY SWA	DATE 11/9/84	
CHECKED BY MLB	11/15/84	
APP'D BY DRG	11/27/84	

TE Connectivity

These drawings and specifications are the property of Omni Spectra Incorporated and shall not be reproduced or copied or used in whole or in part as the basis for the manufacture or sale of item(s) without written permission.

USE ASS'Y PROCEDURE

NO. A.P. N/A

TITLE OSM JACK TO OSN JACK BULKHEAD FEEDTHROUGH ADAPTER

SIZE	CODE IDENT NO.		REV
B	26805	1057463-1	B1
SCALE 3:1			SHEET 1 OF 1

Mouser Electronics

Authorized Distributor

Click to View Pricing, Inventory, Delivery & Lifecycle Information:

TE Connectivity:
3084-2240-00