THIS DRAWING IS UNPUBLISHED. RELEASED FOR PUBLICATION 20
© COPYRIGHT 20 BY TYCO ELECTRONICS CORPORATION. ALL RIGHTS RESERVED.

PART NUMBER	REV	TERMINATOR	FEED TYPE	DESCRIPTION
1426592-1	A	LEADMAKER	MECH POST FEED	CUTS CARRIER
1426592-2	A	BENCH	MECH PRE FEED	CUTS CARRIER
1426592-6	A	LEADMAKER	MECH POST FEED	CONTINUOUS CARRIER
7-1426592-1	A	LEADMAKER	MECH POST FEED	-1 AND SPARE PARTS
7-1426592-2	A	BENCH	MECH PRE FEED	-2 AND SPARE PARTS
7-1426592-6	A	LEADMAKER	MECH POST FEED	-6 AND SPARE PARTS
7-1426592-7	A	-	-	SPARE PARTS KIT

SET UP GAGE 458637-3

LOC	DIST
A	66

REVISIONS

P	LTR	DESCRIPTION	DATE	DWN	APVD
	A	SEE ECO-06-006490	20MAR2006	DP	MC

CRIMP DATA FCI TERMINAL TYCO CRIMP SPECS 6

TERMINAL NAME: APEX MALE 2.8mm TERMINAL

CRIMP	SIZE	TYPE	RANGE
WIRE	2.29 [.090 IN]	F	0.50mm²-1.00mm² 7
INSUL	3.30 [.130 IN]	F	1.50-2.13 [.059-.084 IN]

WIRE STRIP LENGTH 4.70-5.50 [.185-.216 IN]

APPL INSTRUCTIONS 408-8322

TERMINAL - -
APPL SPEC - -

FEED 15.24 [.600 IN]

TERMINALS APPLIED

TYCO PN	MANUF'S PN	-	-
1572912-1	54001818	-	-
1572912-2	54001801	-	-
1572912-3	54001804	-	-
1572912-4	54001819	-	-

WIRE SIZE	CRIMP HEIGHT	PIN PN & LENGTH [IN]
1.00mm²	1.52 ±0.05 [.060 ±.002 IN]	354779-4 [.3010]
0.75mm²	1.47 ±0.05 [.058 ±.002 IN]	354779-8 [.3030]
0.50mm²	1.40 ±0.05 [.055 ±.002 IN]	1-354779-4 [.3060]
-	-	-
-	-	-
-	-	-
-	-	-
-	-	-
-	-	-
-	-	-
-	-	-
-	-	-

1. RECOMMENDED SPARE PARTS.
2. GREASE RAM, CAM, CAM FOLLOWER AND FEED ROD LIGHTLY.
3. CERTAIN TERMINALS REQUIRE LUBRICATION. REFER TO THE APPLICATOR INSTRUCTION SHEET FOR MORE INFORMATION.
4. LUBRICATE DAILY PER THE APPLICATOR INSTRUCTION SHEET SUPPLIED WITH THE APPLICATOR.
5. ITEM 53 CUT TO LENGTH AT ASSEMBLY.
6. ALL CRIMP DATA CALCULATED BY TYCO ELECTRONICS.
7. WIRE RANGE STATED ARE THOSE OF ORIGINAL CUSTOMER. TERMINAL RANGE IS 20 - 18 AWG.

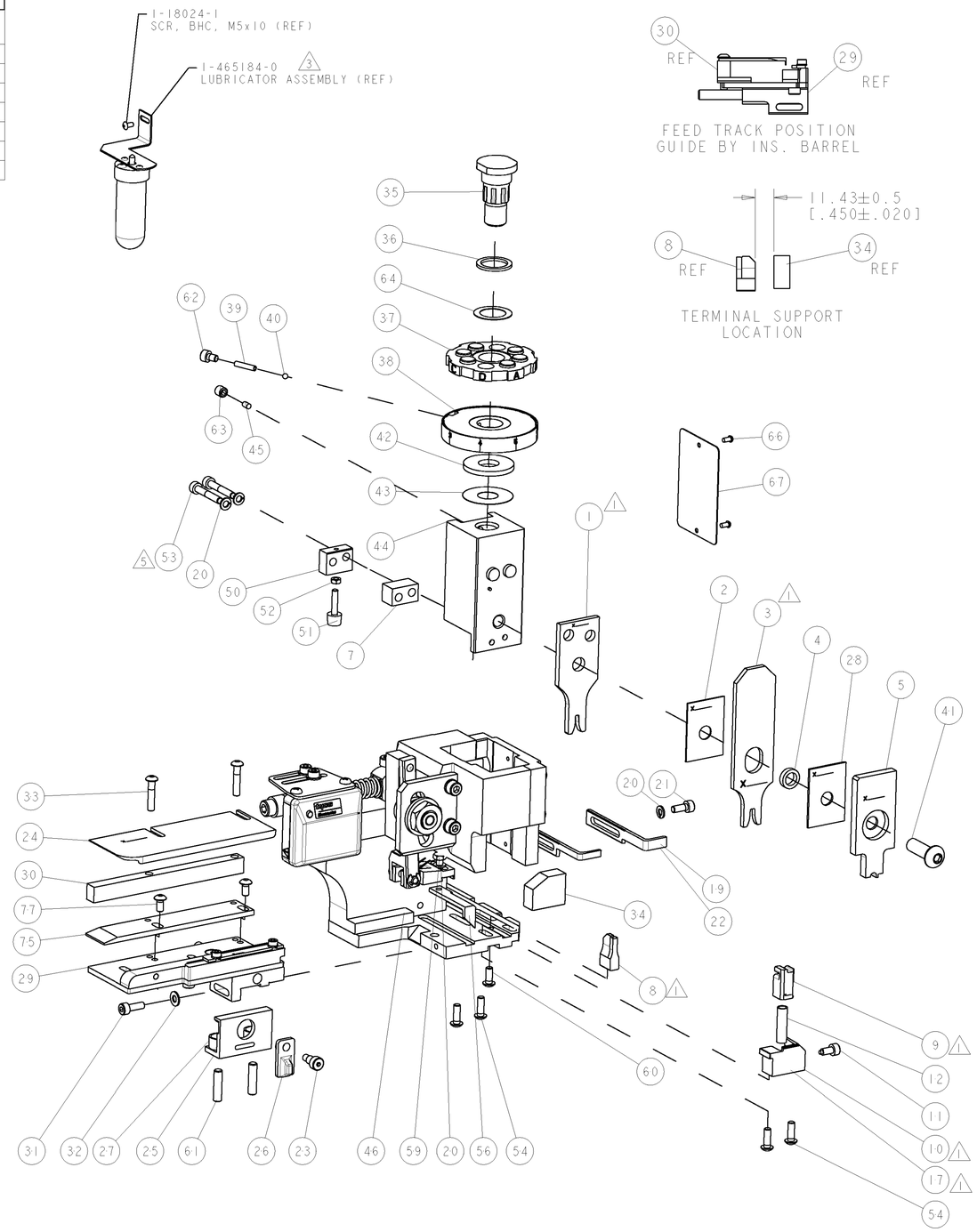

ITEM NO	PART NO	DESCRIPTION	-77	-76	-72	-71	-6	-2	-1
73	-	-	-	-	-	-	-	-	-
72	-	-	-	-	-	-	-	-	-
71	1338705-1	DOCUMENTATION PACKAGE	-	1	1	1	1	1	1
70	-	-	-	-	-	-	-	-	-
69	-	-	-	-	-	-	-	-	-
68	-	-	-	-	-	-	-	-	-
67	461264-1	PLATE, IDENTIFICATION	-	1	1	1	1	1	1
66	21017-2	SCREW, DRIVE	-	2	2	2	2	2	2
65	-	-	-	-	-	-	-	-	-
64	986950-1	WASHER, FLAT PRECISION	-	1	1	1	1	1	1
63	3-18031-0	SCR, SET, CUP POINT M6 X 6.0	-	1	1	1	1	1	1
62	18023-9	SCR, SKT HD CAP M4 X 6.0	-	1	1	1	1	1	1
61	2-18032-5	SCR, SET, FLT POINT M5 X 20.0	-	2	2	2	2	2	2
60	18024-7	SCR, BTN SKT HD CAP (M4 X 10.0)	-	1	1	1	1	1	1
59	5-18022-2	SCR, HEX HD CAP M4 X 8.0	-	1	1	1	1	1	1
58	-	-	-	-	-	-	-	-	-
57	-	-	-	-	-	-	-	-	-
56	1338685-1	PAWL, FEED	-	1	1	1	1	1	1
55	-	-	-	-	-	-	-	-	-
54	18024-8	SCR, BTN SKT HD CAP (M4 X 12.0)	-	4	4	4	4	4	4
53	1-18023-5	SCR, SKT HD CAP M4 X 25.0	-	2	2	2	2	2	2
52	18030-1	NUT, HEX, REG M3	-	1	1	1	1	1	1
51	811242-5	BUMPER, HOLD DOWN	-	1	1	1	1	1	1
50	690753-2	SPACER, TONKER	-	1	1	1	1	1	1
49	18024-3	SCR, BTN SKT HD CAP (M3 X 10.0)	-	1	1	1	1	1	1
48	1338675-1	CAM, UNIVERSAL PRE FEED	-	-	1	-	-	1	-
47	1338676-1	CAM, UNIVERSAL POST-FEED	-	1	-	1	1	-	1
46	1320999-3	APPLICATOR SUBASSEMBLY, HDI	-	1	1	1	1	1	1
45	690191-1	PLUG,NYLON	-	1	1	1	1	1	1
44	1338660-1	RAM	-	1	1	1	1	1	1
43	690125-1	SHIM SUB-ASSY	-	1	1	1	1	1	1
42	690124-1	WASHER, RAM (.115)	-	1	1	1	1	1	1
41	2-18024-6	SCR, BTN SKT HD CAP (M8 X 25.0)	-	1	1	1	1	1	1
40	23241-1	BALL, STEEL	-	1	1	1	1	1	1
39	2-22278-7	SPRING, COMPRESSION	-	1	1	1	1	1	1
38	1320922-1	DISC, ADJUST, INSULATION CRIMP	-	1	1	1	1	1	1
37	354777-1	WIRE DISC, ASSEMBLY	-	1	1	1	1	1	1
36	22480-5	SPRING, COMPRESSION	-	1	1	1	1	1	1
35	690212-1	POST, RAM	-	1	1	1	1	1	1
34	1320934-2	SUPPORT, TERMINAL	-	1	1	1	1	1	1
33	1-18024-0	SCR, BTN SKT HD CAP (M4 X 20.0)	-	2	2	2	2	2	2
32	18027-2	WASHER, FLAT, REG M4	-	1	1	1	1	1	1
31	1-18023-2	SCR, SKT HD CAP M4 X 12.0	-	1	1	1	1	1	1
30	1-1320908-6	SPACER, STRIP GUIDE	-	1	1	1	1	1	1
29	1633073-1	STRIP GUIDE ASSEMBLY	-	1	1	1	1	1	1
28	1-455888-0	SPACER, CRIMPER	-	1	1	1	1	1	1
27	1-22284-0	SPRING, COMPRESSION	-	2	2	2	2	2	2
26	356835-1	LEVER, DRAG RELEASE	-	1	1	1	1	1	1
25	240792-1	DRAG, TERMINAL	-	1	1	1	1	1	1
24	1320928-3	PLATE, STRIP GUIDE	-	1	1	1	1	1	1
23	980371-4	SCR, SKT HD SHLDR 5.0 DIA X 6.0	-	1	1	1	1	1	1
22	690472-2	STRIPPER	-	1	-	1	1	-	1
21	1-18023-1	SCR, SKT HD CAP M4 X 10.0	-	1	1	1	1	1	1
20	18025-2	WASHER, SPRG LOCK, REG M4	-	4	4	4	4	4	4
19	690472-1	STRIPPER	-	-	1	-	-	1	-
18	-	-	-	-	-	-	-	-	-
17	1338684-1	SHEAR HOLDER, FRONT	-	1	-	1	-	-	1
16	-	-	-	-	-	-	-	-	-
15	-	-	-	-	-	-	-	-	-
14	-	-	-	-	-	-	-	-	-
13	-	-	-	-	-	-	-	-	-
12	3-22280-3	SPRING, COMPRESSION	-	1	1	1	1	1	1
11	356885-4	STOP, SHEAR	-	1	1	1	1	1	1
10	1320921-1	SHEAR HOLDER, FRONT, CUT	-	-	1	-	1	1	1
9	1-454276-9	FLOATING SHEAR, FRONT	-	1	1	1	1	1	1
8	1633132-4	ANVIL, COMBINATION .090	1	2	2	2	1	1	1
7	8-240641-3	SPACER	-	1	1	1	1	1	1
6	-	-	-	-	-	-	-	-	-
5	1-455889-4	DEPRESSOR, SHEAR	-	1	1	1	1	1	1
4	238011-2	BLOCK, CRIMPER SPACER	-	1	1	1	1	1	1
3	6-456134-4	CRIMPER, INSULATION F PREMIUM	1	2	2	2	1	1	1
2	455888-6	SPACER, CRIMPER	-	1	1	1	1	1	1
1	1-456406-5	CRIMPER, WIRE PREMIUM	1	2	2	2	1	1	1

VIEW B ROTATED 180°

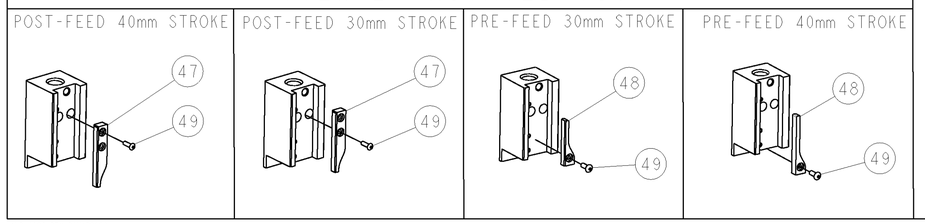

ITEM NO	PART NO	DESCRIPTION	-77	-76	-72	-71	-6	-2	-1
85	-	-	-	-	-	-	-	-	-
84	-	-	-	-	-	-	-	-	-
83	-	-	-	-	-	-	-	-	-
82	-	-	-	-	-	-	-	-	-
81	-	-	-	-	-	-	-	-	-
80	-	-	-	-	-	-	-	-	-
79	-	-	-	-	-	-	-	-	-
78	-	-	-	-	-	-	-	-	-
77	18024-6	SCR, BTN SKT HD CAP (M4 X 8.0)	-	2	2	2	2	2	2
76	-	-	-	-	-	-	-	-	-
75	525891-1	EXTENSION PLATE STRIP GUIDE ASSEMBLY	-	1	1	1	1	1	1
74	-	-	-	-	-	-	-	-	-

THIS DRAWING IS A CONTROLLED DOCUMENT FOR TYCO ELECTRONICS CORPORATION. IT IS SUBJECT TO CHANGE AND THE CONTROLLING ENGINEERING ORGANIZATION SHOULD BE CONTACTED FOR THE LATEST REVISION.

DIMENSIONS: mm [IN]

TOLERANCES UNLESS OTHERWISE SPECIFIED:
0 PLC ±-
1 PLC ±-
2 PLC ±-
3 PLC ±-
4 PLC ±-
ANGLES ±-

MATERIAL - -
FINISH - -

DWN 03JAN2006 D.PROUSE
CHK -
APVD 03JAN2006 M.CLIFFORD

PRODUCT SPEC -
APPLICATION SPEC See Table
WEIGHT -

tyco Electronics
Tyco Electronics
Harrisburg, PA 17105-3608

NAME SIDE FEED HDI APPLICATOR
-
-

SIZE	CAGE CODE	DRAWING NO	RESTRICTED TO
A1	00779	C-1426592	-

CUSTOMER DRAWING SCALE 3:5 SHEET 1 OF 1 REV A

AMP 4805 REV 31MAR2000

Pro/ENGINEER DRAWING

Mouser Electronics

Authorized Distributor

Click to View Pricing, Inventory, Delivery & Lifecycle Information:

TE Connectivity:

1426592-2