THIS DRAWING IS UNPUBLISHED. RELEASED FOR PUBLICATION -,- .
© COPYRIGHT - By - ALL RIGHTS RESERVED.

REVISIONS

P	LTR	DESCRIPTION	DATE	DWN	APVD
	L2	REVISED PER ECO-14-016783	06NOV2014	NK	DR
	L3	REVISED PER ECO-17-007400	29NOV2017	RS	DR

AMP WIRE RANGE	Listed FILE E13288	LR7189 Certified
22-16 AWG SOLID OR STRANDED	22-16 AWG SOLID OR STRANDED	22-16 AWG SOLID OR STRANDED

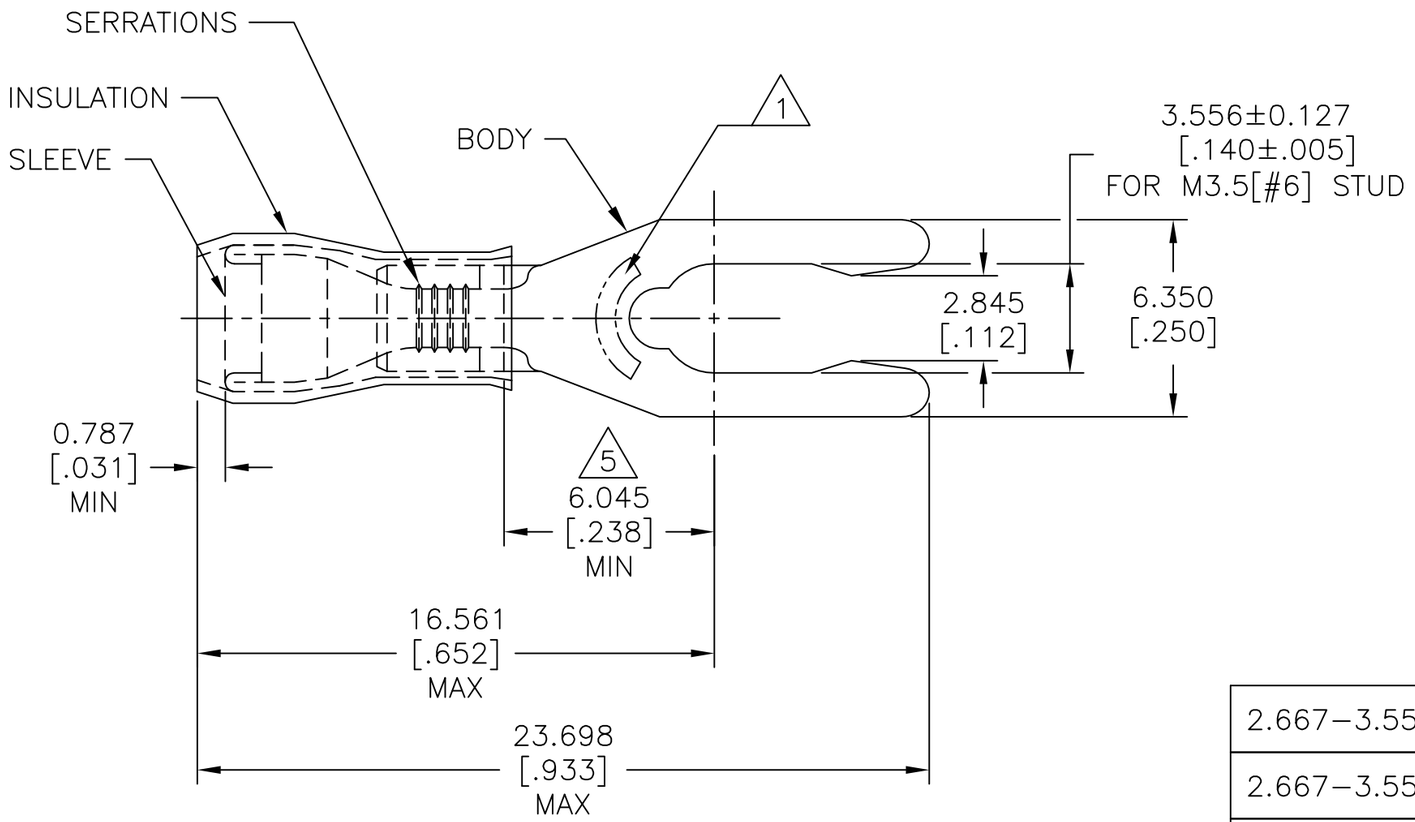

1. STAMP 6S AMP 22-18* APPROX AS SHOWN 22-16 TERMINALS ARE STAMPED 22-18 IN ACCORDANCE WITH MILITARY SPEC SAE AS 7928 COMMERCIAL WIRE RANGE IS 22-16.
2. WIRE INSULATION DIA: DIM "A", SEE TABLE.
3. BODY MATERIAL THK: 0.787±0.051[.031±.002]
4. MATERIAL: BODY - PHOS BRONZE PER ASTM B103
   SLEEVE - CU PER ASTM B152
   INSULATION - NYLON.
5. APPLIES FROM THE METAL EDGE OF BARREL TO CENTERLINE OF STUD.
6. FINISH: BODY & SLEEVE - TIN PLATE PER ASTM B545
   INSULATION - COLOR-RED.

"A"	QTY	PACKAGING TYPE	PART NO.
2.667-3.556[.105-.140]	5000	52409-2 ON TAPE, REEL	52409-3
2.667-3.556[.105-.140]	1000	LOOSE PIECE	52409-2
2.032-3.175[.080-.125]	5000	52409 ON TAPE, REEL	52409-1
2.032-3.175[.080-.125]	1000	LOOSE PIECE	52409

CUSTOMER SERVICE SYSTEMS

FOR ADDITIONAL PRODUCT INFORMATION OR COPIES OF DRAWINGS AND TECHNICAL DOCUMENTS	PRODUCT INFORMATION CENTER 1-800-522-6752
FOR APPLICATION TOOLING INFORMATION	TOOLING ASSISTANCE CENTER 1-800-722-1111
FOR ORDER ENTRY	1-800-526-5142

MAX RECOMMENDED OPERATING TEMPERATURE: 105°C [221°F]

VOLTAGE RATING: 300 V MAX

CIRCULAR MIL AREA: 0.26-1.65mm² [509-3260] SOLID OR STRANDED

THIS DRAWING IS A CONTROLLED DOCUMENT.

DIMENSIONS: mm [INCHES]

TOLERANCES UNLESS OTHERWISE SPECIFIED:
0 PLC ± -
1 PLC ± -
2 PLC ± -
3 PLC ± 0.127[.005]
4 PLC ± -
ANGLES ± -

MATERIAL 4

FINISH 6

DWN	JR RUTH	10DEC09
CHK	TOM MICHIELUTTI	10DEC09
APVD	TOM MICHIELUTTI	10DEC09
PRODUCT SPEC	UL 486 A-B	
APPLICATION SPEC	114-2157	
WEIGHT	-	

TE Connectivity

NAME: TERMINAL, SPRING SPADE PIDG, WIRE SIZE 22-16

SIZE	CAGE CODE	DRAWING NO	RESTRICTED TO
A3	00779	C-52409	-

CUSTOMER DRAWING | SCALE 4:1 | SHEET 1 OF 1 | REV L3

1470-19 (1/15)

Mouser Electronics

Authorized Distributor

Click to View Pricing, Inventory, Delivery & Lifecycle Information:

TE Connectivity:

8-52409-1