REVISIONS			
REV	DESCRIPTION	DATE	APPROVED
05_2	REDRAWN IN CAD; ECN 97-0001	KYLE 8-27-97	8/27/97

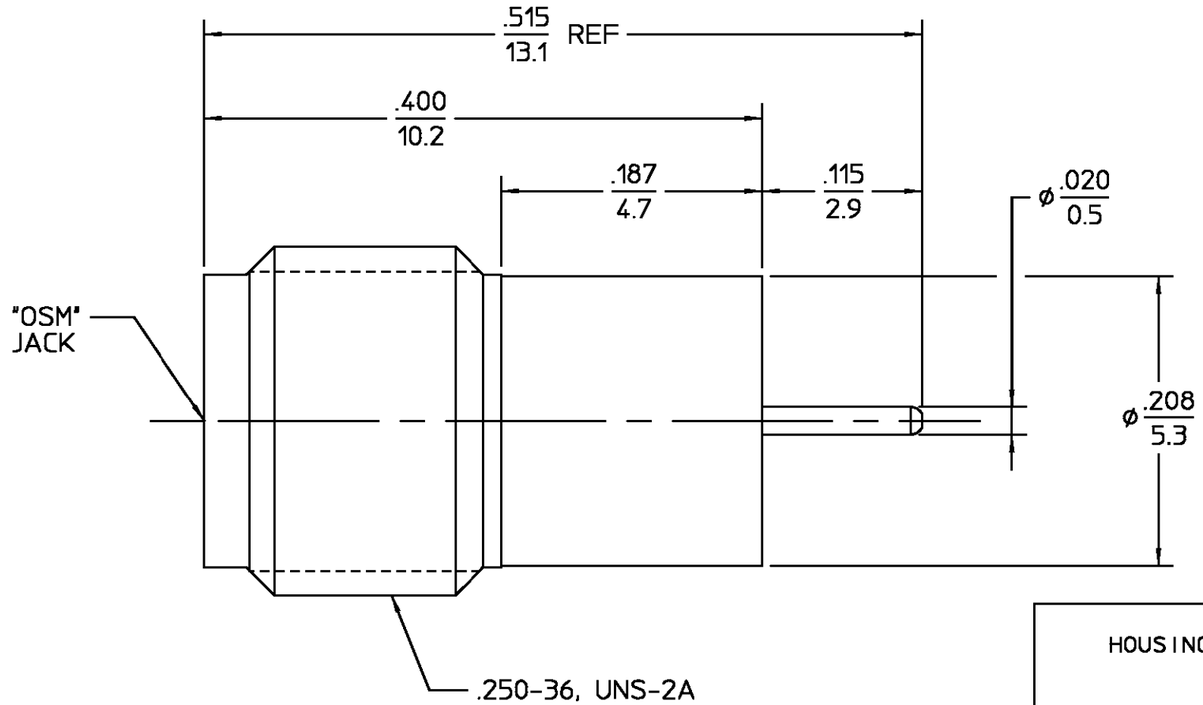

.XXX = in
XX.X = mm (REF)

ELECTRICAL	MECHANICAL	ENVIRONMENTAL
Nominal Impedance (Ohms) 50	Interface Dimensions MIL-STD-348A Fig. 310.2	Temperature Rating -65°C To +165°C
Frequency Range (GHz) DC to 18	Recommended Mating Torque N/A	Vibration MIL-STD-202, Method 204, Condition D
Volt Rating (VRMS MAX) 333	Mating Characteristics:	Shock MIL-STD-202, Method 213, Condition I
VSWR 1.05 + .01f(GHz)	Insertion (MAX Lbs) 3.0	Thermal Shock MIL-STD-202, Method 107, Condition B,
Insertion Loss (dB MAX) $.04\sqrt{f(GHz)}$	Withdrawal (MIN Oz) 1.0	Moisture Resistance MIL-STD-202, Method 106
RF Leakage (dB MIN) -(100 - f(GHz))	Force to Engage and Disengage (In/Lbs MAX) 2.0	Corrosion - MIL-STD-202, Method 101, Condition B, 5% salt spray
Corona, 70,000 Ft (VRMS MIN) 333	Center Contact Captivation	Leak Test-MIL-STD-202, Method 112, Condition C.
Dielectric Withstanding Voltage (VRMS MIN) 1000 @ Sea Level	Axial (Lbs) 6.0	(1×10^{-8} cc/sec/atm)
Contact Resistance (Milliohms MAX)	Radial (In/Oz) N/A	
Center Contact 10.0	Weight (Grams) T.B.D.	
Outer Contact 2.0		
RF High Potential (VRMS MIN @ 5 MHz) 667 @ Sea Level		
I.R.(Megohms MIN) 5000		

COMPONENT	MATERIAL	FINISH
HOUSING	STAINLESS STEEL PER ASTM-A484 AND ASTM-A582, TYPE 303	GOLD PLATE PER MIL-G-45204
DIELECTRIC	PTFE FLUOROCARBON PER ASTM-D-1457	N/A
CENTER CONTACT	BERYLLIUM COPPER PER ASTM-B-196 OR ASTM-B-197, ALLOY C17300, CONDITION H	GOLD PLATE PER MIL-G-45204
CONTACT EXT	IRON-NICKEL-COBALT ALLOY PER MIL-I-23011 CLASS 1 (KOVAR)	GOLD PLATE PER MIL-G-45204
HERMETIC SEAL	GLASS BEAD	N/A

UNLESS OTHERWISE SPECIFIED DIMENSIONS ARE IN INCHES

FRAC.	DEC.	ANGLES
± 1/64	±.005	± 1°

		DATE
DRAWN BY	BDW	9-29-88
CHECKED BY	G.S	4-29-88
APP'D BY	G.D	5-5-88

AMP Incorporated
140 Fourth Avenue
Waltham, MA 02451-7599

These drawings and specifications are the property of M/A COM Interconnect Div. and shall not be reproduced or copied or used in whole or in part as the basis for the manufacture or sale of item(s) without written permission.

USE ASS'Y PROCEDURE

NO. A.P. N/A

TITLE "OSM" PANEL FEEDTRU JACK RECEPTACLE-HERMETIC SEAL

SIZE	CODE IDENT NO.		REV
B	26805	2058-3123-00	05_2
SCALE 10:1			SHEET 1 OF 1

CUSTOMER DRAWING

AMP PART # 1053141-1
SHEET 1 OF 1 REV A

Mouser Electronics

Authorized Distributor

Click to View Pricing, Inventory, Delivery & Lifecycle Information:

TE Connectivity:

1053141-2