KINO-QM770

Mini-ITX SBC with Socket G2 for Intel® 22nm Mobile CPU, DVI-I/Dual HDMI/ LVDS, Dual PCIe GbE, USB 3.0, PCIe Mini, SATA 6Gb/s and Audio

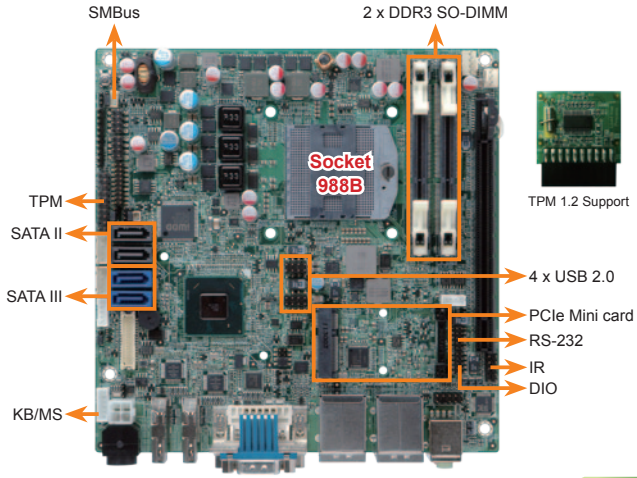

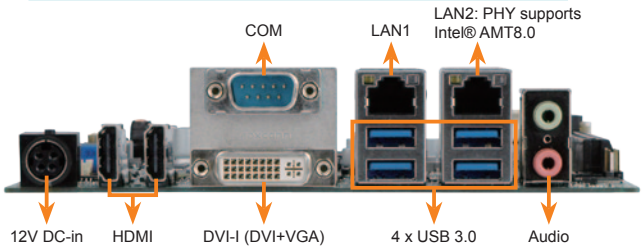

Features

1. Mini-ITX SBC with Socket G2 for Intel® 22nm mobile Ivy Bridge processor
2. Dual-channel 1066/1333/1600MHz DDR3 SDRAM supports up to 16GB
3. HDMI 1.3 compliant, three independent displays supported
4. 3D micro-architecture enhancement supports DX11, OCL 1.1 and OGL 3.1
5. Rich media acceleration for hardware decoding and encoding acceleration
6. Intel® GbE LAN with Intel® AMT 8.0 supported
7. High speed I/O interface for PCIe Gen 3.0 add-on card, USB3.0 and SATA 6Gb/s supported
8. IEI One Key Recovery solution allows you to create rapid OS backup and recovery

Specifications

- CPU
  Socket G2 for Intel® 3rd generation 22nm mobile processor
- PCH
  Intel® QM77
- Memory
  Two 204-pin 1066/1333/1600 MHz dual-channel DDR3 SO-DIMMs supported (system max. 16GB)
- BIOS
  UEFI BIOS
- Ethernet
  LAN1: Intel® 82583V PCIe controller
  LAN2: Intel® 82579 PHY with Intel® AMT 8.0 support
- Graphics Engine
  Supports DX11 and OpenGL 3.1
  Full MPEG2, VC1, AVC Decode
- Display Output
  DVI-I (VGA+DVI) integrated in the Intel® QM77 (up to 1920 x 1200 @60Hz)
  18/24-bit dual-channel LVDS support (up to 1920 x 1200 @60Hz)
  Dual HDMI (HDMI signal only) output supported (up to 1920 x 1200 @60Hz)
- Super I/O
  Fintek F81866
- Embedded Controller
  iWDD EC
- Audio
  Realtek ALC892 HD codec
- I/O Interface
  2 x RS-232 — 1 x RS-422/485
  4 x USB 2.0 — 4 x USB 3.0
  1 x 6-pin header for KB/MS — 2 x SATA power connector (5V/12V)
  2 x SATA 3Gb/s and 2 x SATA 6Gb/s with RAID 0/1/5/10 support
- SMBus
  1 x 4-pin wafer
- TPM
  1 x TPM connector (2x10 pin)
- Expansions
  1 x PCIe Mini card slot
  1 x PCIe x16
- Watchdog Timer
  Software programmable supports 1~255 sec. system reset
- Programmable I/O
  8-bit digital I/O
- Infrared Interface
  1 x 5-pin header
- Fan Connector
  1 x 4-pin CPU fan connector
  1 x 3-pin system fan connector
- Power Supply
  Single voltage 12V DC input — 1 x External 4-pin DIN DC jack
  1 x internal 2x2-pin power connector — Supports AT/ATX mode
- Power Consumption
  12V@6.08A (2.3GHz Intel® Core™ i7-3610QE with two 1333 MHz 4GB DDR3 memory running 3DMark06 burn in)
- Operating Temperature: -10°C ~ 60°C
- Storage Temperature: -20°C ~ 70°C
- Operating Humidity: 5% ~ 95%, non-condensing
- Dimensions: 170 mm x 170 mm
- Weight: GW: 900g/NW: 450g

Dimensions (Unit: mm)

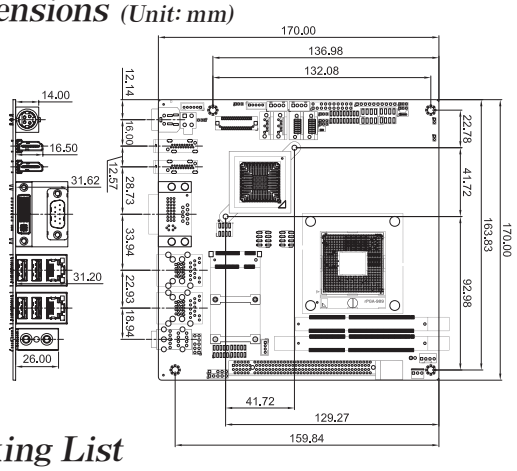

Packing List

1 x KINO-QM770 single board computer	
2 x SATA with power output cable (P/N: 32801-000100-300-RS)	
1 x RS-232 cable with bracket (P/N: 19800-000300-100-RS)	
1 x I/O shielding (P/N: 45014-0037C0-00-RS)	
1 x One Key Recovery CD	1 x Mini jumper pack
1 x Utility CD	1 x QIG (Quick Installation Guide)

Ordering Information

Part No.	Description
KINO-QM770-R10	Mini-ITX SBC with Socket G2 for Intel® 22nm mobile CPU, DVI-I/dual HDMI/LVDS, dual PCIe GbE, USB 3.0, PCIe Mini, SATA 6Gb/s and Audio
19800-003100-300-RS	Dual USB cable
32000-023800-RS	KB/MS Y cable
SACF-KIT01-R10	SATA to CF converter board
CF-989A-RS-R12	CPU cooler for mobile socket-G (PGA988) up to 55W processor, copper, 60 x 60 x 27.6mm, RoHS
TPM-IN01-R11	20-pin Infineon TPM module, software management tool, firmware V3.17
32205-003800-300-RS	RS-422/485 cable with bracket
33Z00-000031-RS	DVI-I to VGA adapter connector

Mouser Electronics

Authorized Distributor

Click to View Pricing, Inventory, Delivery & Lifecycle Information:

IEI:
KINO-QM770-R10