This document was generated on 10/19/2018

PLEASE CHECK WWW.MOLEX.COM FOR LATEST PART INFORMATION

Part Number: 0532900980

Status: Active

Description: 2.00mm Pitch Board-to-Board Header, Vertical, Single Row, 0.50mm Square Pin, with Friction Lock, 9 Circuits, with Kinked PC Tails

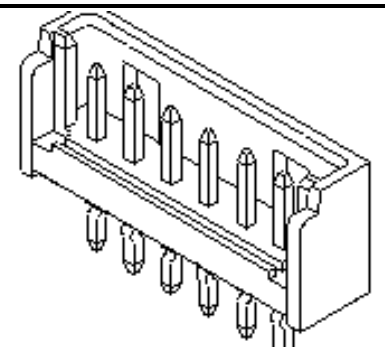

Series image - Reference only

Documents:

3D Model
Drawing (PDF)
Product Specification PS-52418-003-001 (PDF)
Packaging Specification 532909200-201 (PDF)
RoHS Certificate of Compliance (PDF)

General

Product Family	PCB Headers
Series	53290
Application	Board-to-Board, Signal
Product Name	SlimStack
UPC	822348477715

Physical

Breakaway	No
Circuits (Loaded)	9
Circuits (maximum)	9
Color - Resin	Natural
Durability (mating cycles max)	30
First Mate / Last Break	No
Glow-Wire Capable	No
Guide to Mating Part	No
Keying to Mating Part	None
Lock to Mating Part	Yes
Mated Height	3.95mm
Mated Width	6.00mm
Material - Metal	Brass
Material - Plating Mating	Tin
Material - Plating Termination	Tin
Material - Resin	Polyester
Net Weight	434.500/mg
Number of Rows	1
Orientation	Vertical
PC Tail Length	3.20mm
PCB Locator	No
PCB Retention	Yes
PCB Thickness - Recommended	1.60mm
Packaging Type	Tray
Pitch - Mating Interface	2.00mm
Plating min - Mating	1.016µm
Plating min - Termination	1.016µm
Polarized to Mating Part	Yes
Polarized to PCB	No
Shrouded	Partial
Surface Mount Compatible (SMC)	No
Temperature Range - Operating	-40° to +105°C
Termination Interface: Style	Through Hole

Electrical

Current - Maximum per Contact	1.5A
Voltage - Maximum	125V

Material Info

EU ELV
Not Relevant

EU RoHS
Compliant

China RoHS

REACH SVHC
Not Contained Per - ED/61/2018 (27 June 2018)

Halogen-Free Status
Not Low-Halogen

For more information, please visit Contact US

China ROHS	Green Image
ELV	Not Relevant
RoHS Phthalates	Not Contained

Search Parts in this Series
53290 Series

Mates With
52418 PCB Receptacle

Reference - Drawing Numbers

Packaging Specification	532909200-201
Product Specification	PS-52418-003-001
Sales Drawing	SD-53290-004

This document was generated on 10/19/2018

PLEASE CHECK WWW.MOLEX.COM FOR LATEST PART INFORMATION

Mouser Electronics

Authorized Distributor

Click to View Pricing, Inventory, Delivery & Lifecycle Information:

Molex:
53290-0980