FEATURES SELECTION GUIDE

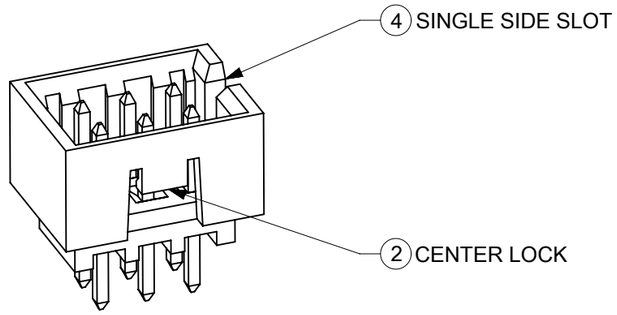

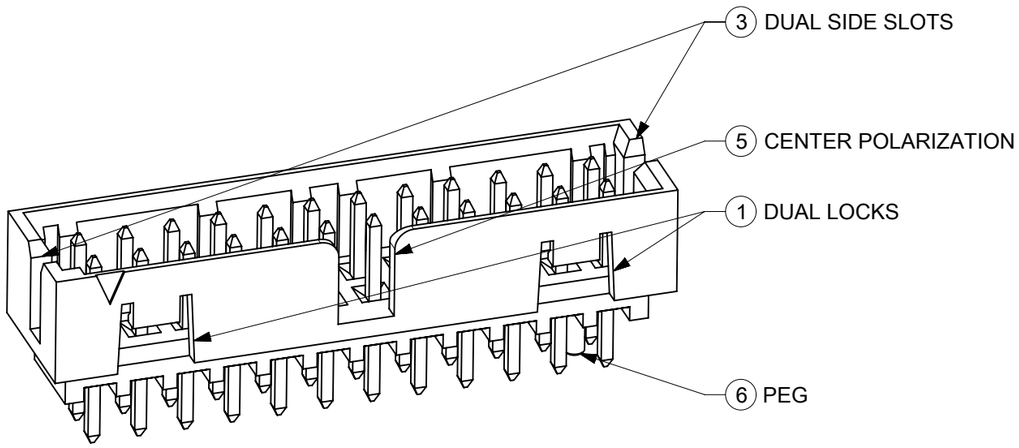

FEATURES							
CIRCUIT SIZE	FRICTION LOCKS		SIDE SLOTS		5 CENTER POLARIZATION	6 PEG	SHEET NO
	1 DUAL	2 CENTER	3 DUAL	4 SINGLE			
4	N.A	N.A	YES	N.A	N.A	N.A	2 - 3
	N.A	YES	YES	N.A	N.A	N.A	
	N.A	YES	N.A	YES	N.A	N.A	
6	N.A	N.A	YES	N.A	N.A	N.A	4 - 5
	N.A	N.A	YES	N.A	N.A	YES	
	N.A	YES	YES	N.A	N.A	N.A	
	N.A	YES	YES	N.A	N.A	YES	
	N.A	YES	N.A	YES	N.A	N.A	
	N.A	YES	N.A	YES	N.A	YES	
	N.A	N.A	YES	N.A	YES	N.A	
8 TO 12	N.A	N.A	YES	N.A	YES	N.A	6 - 8
	N.A	N.A	YES	N.A	YES	YES	
	N.A	YES	YES	N.A	N.A	N.A	
	N.A	YES	YES	N.A	N.A	YES	
	N.A	YES	N.A	YES	N.A	N.A	
	N.A	YES	N.A	YES	N.A	YES	
14 TO 50	YES	N.A	YES	N.A	YES	N.A	9 - 13
	YES	N.A	YES	N.A	YES	YES	

PACKAGING SPECIFICATION TABLE

TAPE AND REEL PACKAGING	PK-87831-300
TUBE STANDARD PACKAGING	PK-87831-001
TUBE NON-STANDARD PACKAGING FOR: 87831-0419 87831-0645 87831-5141 87831-5119 87831-0443 87831-1011 87831-5241 87831-1420 87831-5242 87831-0643	PK-87831-002

THIS DRAWING CONTAINS INFORMATION THAT IS PROPRIETARY TO MOLEX ELECTRONIC TECHNOLOGIES, LLC AND SHOULD NOT BE USED WITHOUT WRITTEN PERMISSION

ADD P/N 87831-2445 2018/07/26
EC NO: 601974 2018/07/26
DRWN: SCS02 CHK'D: GJEEVANSURES 2018/08/03
APPR: ISHWARG

GENERAL TOLERANCES (UNLESS SPECIFIED)

	MM	INCH
4 PLACES	±	±
3 PLACES	±	±
2 PLACES	± 0.2	±
1 PLACES	±	±
0 PLACES	±	±

ANGULAR TOL ± 3.0

DRAFT WHERE APPLICABLE MUST REMAIN WITHIN DIMENSIONS

REV A15

DIMENSION UNITS: MM
SCALE: NTS
DRWN BY: GMENARLY DATE: 2015/04/15
CHK'D BY: CGOH DATE: 2015/06/29
APPR BY: KHLIM DATE: 2015/06/29
DRAWING SIZE: A3
THIRD ANGLE PROJECTION

molex®

MILLIGRID
2MM PITCH, THROUGH HOLE VERTICAL SHROUDED HEADER

PRODUCT CUSTOMER DRAWING

SERIES	MATERIAL NUMBER	CUSTOMER
87831	SEE TABLE	GENERAL MARKET

DOCUMENT NUMBER	DOC TYPE	DOC PART	SHEET NUMBER
SD-87831-0001	PSD	001	1 OF 13

RELEASE STATUS	P1	RELEASE DATE	2018/08/03 00:10:23

FORMAT: Met-lega-master-tb-prod-A3
REVISION: C
DATE: 2017/02/06

4 CIRCUITS

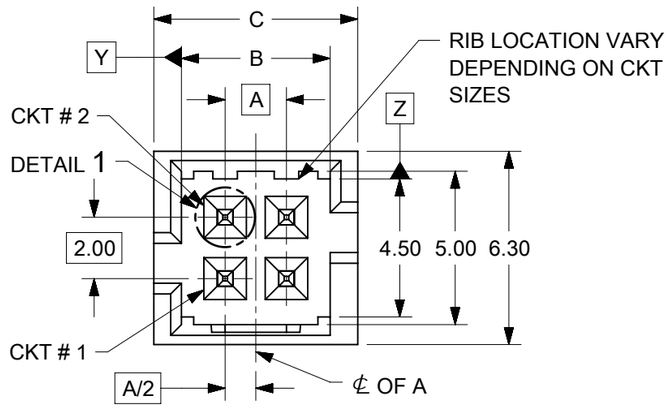

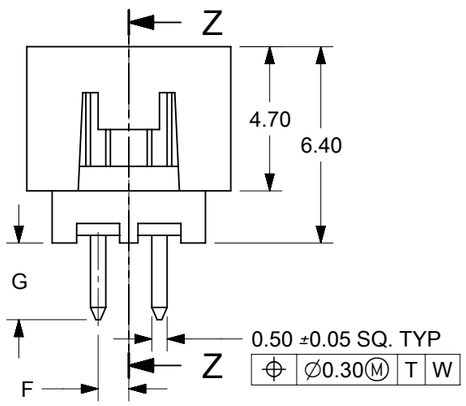

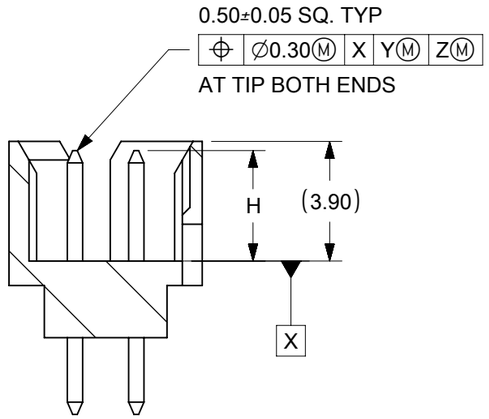

SECTION Z-Z

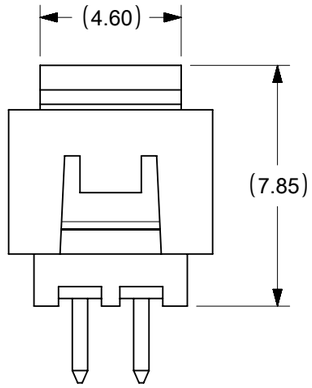

VIEW FOR HEADER WITH CAP

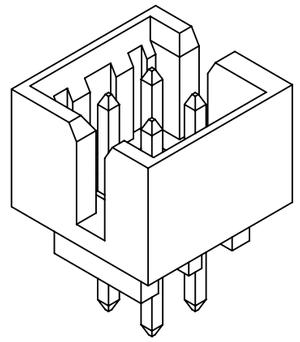

VIEW FOR HEADER WITH ONLY DUAL SLOTS

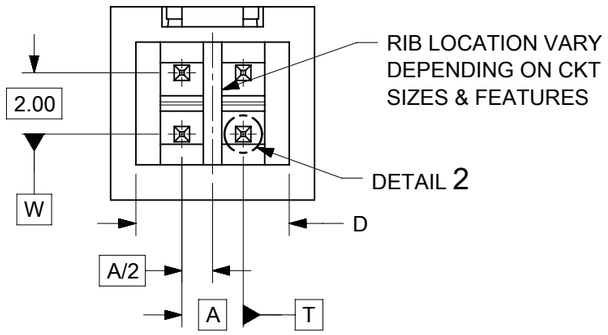

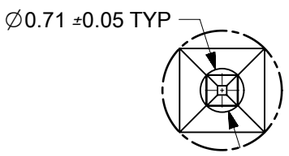

DETAIL 1

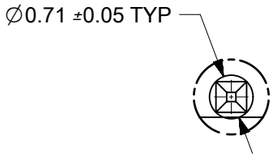

DETAIL 2

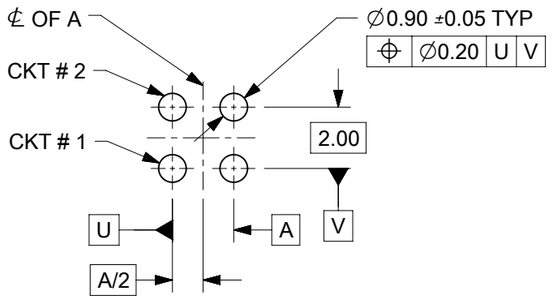

RECOMMENDED PCB LAYOUT

NOTES:
1. MATERIALS:
   HOUSING: 30% GF, NYLON, UL94V-0, COLOR: BLACK
   PIN: 0.50mm SQ. PHOSPHOR BRONZE
2. FINISHES: REFER TO PLATING OPTIONS
3. PRODUCT SPECIFICATION: PS-87831-027
4. PACKAGING SPECIFICATION: SEE PACKAGING SPECS TABLE ON SHEET 1
5. MATES WITH: A. MOLEX CRIMP RECEPTACLE HOUSING: 51110 SERIES
   AND CRIMP TERMINAL: 50394 SERIES
   B. MOLEX 2mm MILLIGRID DUAL ROW IDT: 87568 SERIES
   C. MOLEX 2mm MILLIGRID DUAL ROW RECEPTACLE:
   79107 (GOLD PLATED), 78787 (TIN PLATED)

THIS DRAWING CONTAINS INFORMATION THAT IS PROPRIETARY TO MOLEX ELECTRONIC TECHNOLOGIES, LLC AND SHOULD NOT BE USED WITHOUT WRITTEN PERMISSION

ADD P/N 87831-2445	2018/07/26	
EC NO: 601974	2018/07/26	
DRWN: SCS02	2018/08/03	
CHK'D: GJEEVANSURES		
APPR: ISHWARG		

GENERAL TOLERANCES (UNLESS SPECIFIED)

	MM	INCH
4 PLACES	±	±
3 PLACES	±	±
2 PLACES	± 0.2	±
1 PLACES	±	±
0 PLACES	±	±

ANGULAR TOL ± 3.0

DRAFT WHERE APPLICABLE MUST REMAIN WITHIN DIMENSIONS

REV A15

DIMENSION UNITS	SCALE
MM	NTS
DRWN BY: GMENARLY	DATE: 2015/04/15
CHK'D BY: CGOH	DATE: 2015/06/29
APPR BY: KHLIM	DATE: 2015/06/29
DRAWING SIZE: A3	THIRD ANGLE PROJECTION

molex®

MILLIGRID
2MM PITCH, THROUGH HOLE VERTICAL SHROUDED HEADER

PRODUCT CUSTOMER DRAWING

SERIES	MATERIAL NUMBER	CUSTOMER
87831	SEE TABLE	GENERAL MARKET

DOCUMENT NUMBER	DOC TYPE	DOC PART	SHEET NUMBER
SD-87831-0001	PSD	001	2 OF 13

RELEASE STATUS	P1	RELEASE DATE	2018/08/03 00:10:23

FORMAT: Met-lega-master-tb-prod-A3
REVISION: C
DATE: 2017/02/06

4 CIRCUITS

CKT SIZE	ASSY P/N WITHOUT CAP IN TUBE	ASSY P/N WITH CAP IN TUBE	ASSY P/N WITH CAP IN T&R	PLATING OPTIONS	FRICTION LOCKS		SIDE SLOTS		CENTER POLARIZATION	PEG	DIMENSION							
					DUAL	CENTER	DUAL	SINGLE			A	B	C	D	E	F	G	H
4	87831-0419	N.A	N.A	1	N.A	N.A	YES	N.A	N.A	N.A	2.00	4.85	6.65	5.00	N.A	N.A	2.50	3.60±0.20
	87831-0420	N.A	N.A	2														
	87831-0421	N.A	N.A	3														
	87831-0436	N.A	N.A	4														
	87831-0441	87831-0456	N.A	2	N.A	YES	YES	N.A	N.A	N.A						1.00	2.50	
	87831-0442	N.A	87831-5565	3														
	87831-5141	N.A	N.A	2	N.A	YES	YES	N.A	N.A	N.A							3.50	
	87831-5142	N.A	N.A	3														
	87831-6141	N.A	N.A	2	N.A	YES	YES	N.A	N.A	N.A							2.80	
	87831-6142	N.A	N.A	3														
	87831-0443	N.A	N.A	2	N.A	YES	N.A	YES	N.A	N.A							2.50	$3.60^{+0.15}_{-0.10}$
	87831-0444	N.A	N.A	3														

PLATING OPTIONS:

1 - 0.05-0.13µm/2-5µin GOLD IN CONTACT AREA AND
1.88µm/75µin MIN. MATTE TIN IN SOLDER TAIL AREA OVER
1.27µm/50µin MIN. NICKEL OVERALL.

2 - 0.38µm/15µin GOLD IN CONTACT AREA AND
1.88µm/75µin MIN. MATTE TIN IN SOLDER TAIL AREA OVER
1.27µm/50µin MIN. NICKEL OVERALL.

3 - 0.76µm/30µin GOLD IN CONTACT AREA AND
1.88µm/75µin MIN. MATTETIN IN SOLDER TAIL AREA OVER
1.27µm/50µin MIN. NICKEL OVERALL.

4 - 2.50µm/100µin MIN. MATTE TIN OVER 1.25µm/50µin MIN. NICKEL OVERALL.

THIS DRAWING CONTAINS INFORMATION THAT IS PROPRIETARY TO MOLEX ELECTRONIC TECHNOLOGIES, LLC AND SHOULD NOT BE USED WITHOUT WRITTEN PERMISSION

ADD P/N 87831-2445
EC NO: 601974 2018/07/26
DRWN: SCS02 2018/07/26
CHK'D: GJEEVANSURES 2018/07/26
APPR: ISHWARG 2018/08/03

GENERAL TOLERANCES (UNLESS SPECIFIED)

	MM	INCH
4 PLACES	±	±
3 PLACES	±	±
2 PLACES	± 0.2	±
1 PLACES	±	±
0 PLACES	±	±

ANGULAR TOL ± 3.0

DRAFT WHERE APPLICABLE MUST REMAIN WITHIN DIMENSIONS

A15 REV

DIMENSION UNITS: MM
SCALE: NTS
DRWN BY: GMENARLY DATE: 2015/04/15
CHK'D BY: CGOH DATE: 2015/06/29
APPR BY: KHLIM DATE: 2015/06/29
DRAWING SIZE: A3
THIRD ANGLE PROJECTION

molex®

MILLIGRID
2MM PITCH, THROUGH HOLE VERTICAL SHROUDED HEADER

PRODUCT CUSTOMER DRAWING

SERIES: 87831
MATERIAL NUMBER: SEE TABLE
CUSTOMER: GENERAL MARKET
DOCUMENT NUMBER: SD-87831-0001
DOC TYPE: PSD
DOC PART: 001
SHEET NUMBER: 3 OF 13

RELEASE STATUS | P1 | RELEASE DATE | 2018/08/03 00:10:23

FORMAT: Met-lega-master-tb-prod-A3
REVISION: C
DATE: 2017/02/06

6 CIRCUITS

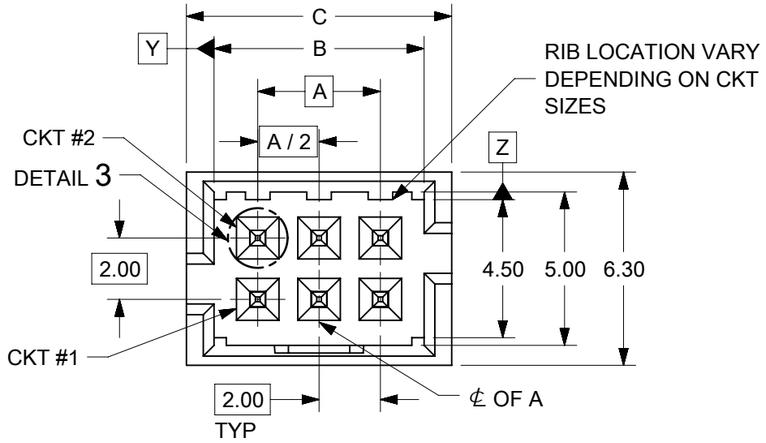

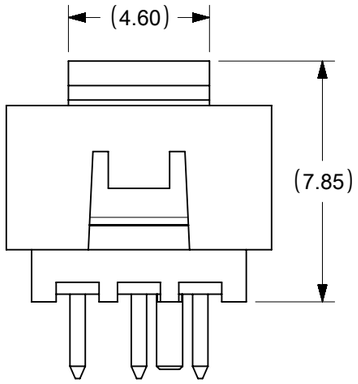

VIEW FOR HEADER WITH CAP

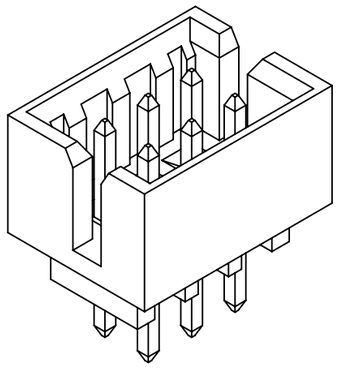

VIEW FOR HEADER WITH ONLY DUAL SLOTS

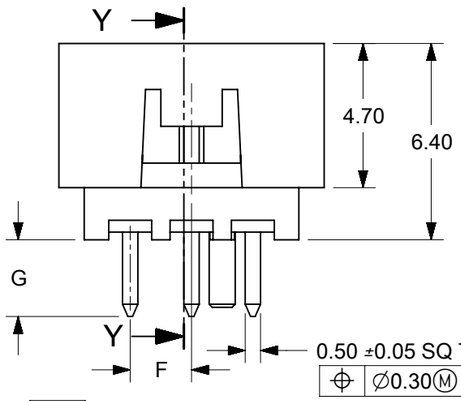

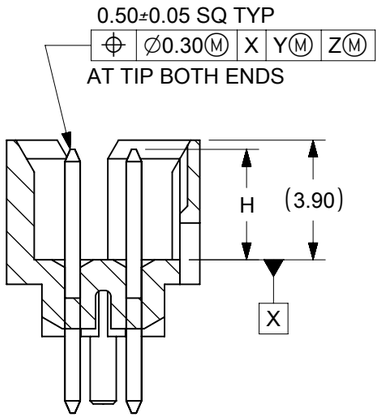

SECTION Y-Y

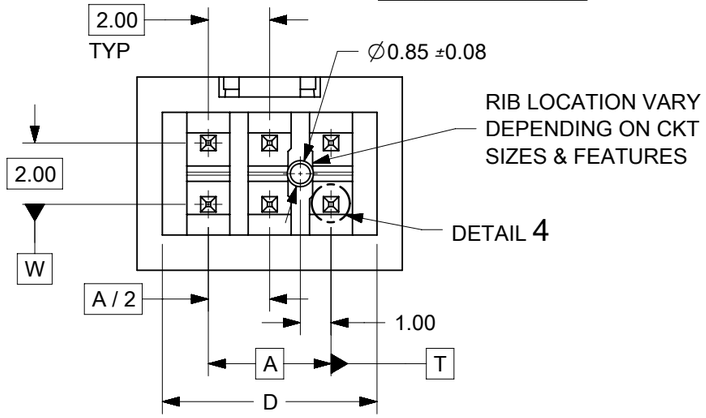

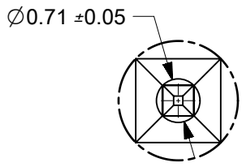

DETAIL 3

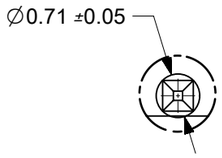

DETAIL 4

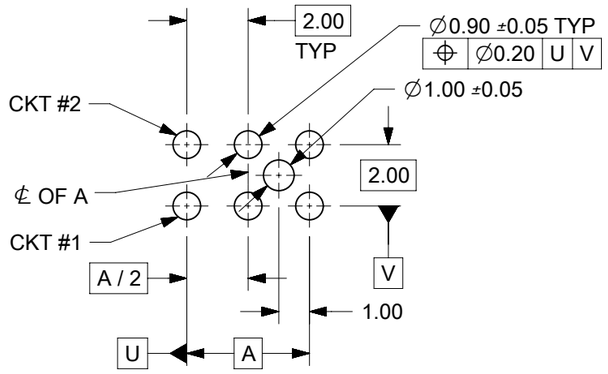

RECOMMENDED PCB LAYOUT

NOTES:
1. MATERIALS:
   HOUSING: 30% GF, NYLON, UL94V-0, COLOR: BLACK
   PIN: 0.50mm SQ PHOSPHOR BRONZE
2. FINISHES: REFER TO PLATING OPTIONS
3. PRODUCT SPECIFICATION: PS-87831-027
4. PACKAGING SPECIFICATION: SEE PACKAGING SPECS TABLE ON SHEET 1
5. MATES WITH: A. MOLEX CRIMP RECEPTACLE HOUSING: 51110 SERIES
   AND CRIMP TERMINAL: 50394 SERIES
   B. MOLEX 2mm MILLIGRID DUAL ROW IDT: 87568 SERIES
   C. MOLEX 2mm MILLIGRID DUAL ROW RECEPTACLE:
   79107 (GOLD PLATED), 78787 (TIN PLATED)

THIS DRAWING CONTAINS INFORMATION THAT IS PROPRIETARY TO MOLEX ELECTRONIC TECHNOLOGIES, LLC AND SHOULD NOT BE USED WITHOUT WRITTEN PERMISSION

ADD P/N 87831-2445	2018/07/26	
EC NO: 601974	2018/07/26	
DRWN: SCS02	2018/08/03	
CHK'D: GJEEVANSURES		
APPR: ISHWARG		
A15	REV	

GENERAL TOLERANCES (UNLESS SPECIFIED)

	MM	INCH
4 PLACES	±	±
3 PLACES	±	±
2 PLACES	± 0.2	±
1 PLACES	±	±
0 PLACES	±	±

ANGULAR TOL ± 3.0

DRAFT WHERE APPLICABLE MUST REMAIN WITHIN DIMENSIONS

DIMENSION UNITS	MM
SCALE	NTS
DRWN BY	GMENARLY
DATE	2015/04/15
CHK'D BY	CGOH
DATE	2015/06/29
APPR BY	KHLIM
DATE	2015/06/29
DRAWING SIZE	A3
THIRD ANGLE PROJECTION	

molex®

MILLIGRID
2MM PITCH, THROUGH HOLE VERTICAL SHROUDED HEADER

PRODUCT CUSTOMER DRAWING

SERIES	MATERIAL NUMBER	CUSTOMER
87831	SEE TABLE	GENERAL MARKET

DOCUMENT NUMBER	DOC TYPE	DOC PART	SHEET NUMBER
SD-87831-0001	PSD	001	4 OF 13

RELEASE STATUS	P1	RELEASE DATE	2018/08/03 00:10:23

FORMAT: Met-lega-master-tb-prod-A3
REVISION: C
DATE: 2017/02/06

6 CIRCUITS

CKT SIZE	ASSY P/N WITHOUT CAP IN TUBE	ASSY P/N WITH CAP IN TUBE	ASSY P/N WITH CAP IN T&R	PLATING OPTIONS	FRICTION LOCKS		SIDE SLOTS		CENTER POLARIZATION	PEG	DIMENSION							
					DUAL	CENTER	DUAL	SINGLE			A	B	C	D	E	F	G	H
6	87831-0619	N.A	N.A	1	N.A	N.A	YES	N.A	N.A	N.A	4.00	6.85	8.65	7.00	N.A	N.A	2.50	3.60±0.20
	87831-0620	N.A	N.A	2														
	87831-0621	N.A	N.A	3														
	87831-0636	N.A	N.A	4														
	87831-0628	N.A	N.A	2	N.A	N.A	YES	N.A	N.A	YES						N.A	2.50	
	87831-0629	N.A	N.A	3														
	87831-0641	N.A	N.A	2	N.A	YES	YES	N.A	N.A	N.A						2.00	2.50	
	87831-0642	N.A	87831-5552	3														
	87831-5241	N.A	N.A	2	N.A	YES	YES	N.A	N.A	N.A							3.50	
	87831-5242	N.A	N.A	3														
	87831-6241	N.A	N.A	2	N.A	YES	YES	N.A	N.A	N.A							2.80	
	87831-6242	N.A	N.A	3														
	87831-0643	N.A	N.A	2	N.A	YES	N.A	YES	N.A	N.A							2.50	3.60 +0.15 -0.10
	87831-0644	N.A	N.A	3														
	87831-0645	N.A	N.A	2	N.A	YES	N.A	YES	N.A	YES							2.50	
	87831-0646	N.A	N.A	3														
	87831-0632	N.A	N.A	2	N.A	YES	YES	N.A	N.A	YES							2.50	
	87831-5119	N.A	N.A	1	N.A	N.A	YES	N.A	YES	N.A						N.A	2.50	3.60±0.20
	87831-5121	N.A	N.A	3														
	87831-5136	N.A	N.A	4														

PLATING OPTIONS:

1 - 0.05-0.13µm/2-5µin GOLD IN CONTACT AREA AND
1.88µm/75µin MIN. MATTE TIN IN SOLDER TAIL AREA OVER
1.27µm/50µin MIN. NICKEL OVERALL.
2 - 0.38µm/15µin GOLD IN CONTACT AREA AND
1.88µm/75µin MIN. MATTE TIN IN SOLDER TAIL AREA OVER
1.27µm/50µin MIN. NICKEL OVERALL.
3 - 0.76µm/30µin GOLD IN CONTACT AREA AND
1.88µm/75µin MIN. MATTE TIN IN SOLDER TAIL AREA OVER
1.27µm/50µin MIN. NICKEL OVERALL.
4 - 2.50µm/100µin MIN. MATTE TIN OVER 1.25µm/50µin MIN. NICKEL OVERALL.

THIS DRAWING CONTAINS INFORMATION THAT IS PROPRIETARY TO MOLEX ELECTRONIC TECHNOLOGIES, LLC AND SHOULD NOT BE USED WITHOUT WRITTEN PERMISSION

ADD P/N 87831-2445 2018/07/26
EC NO: 601974 2018/07/26
DRWN: SCS02 CHK'D: GJEEVANSURES 2018/08/03
APPR: ISHWARG

GENERAL TOLERANCES (UNLESS SPECIFIED)

	MM	INCH
4 PLACES	±	±
3 PLACES	±	±
2 PLACES	± 0.2	±
1 PLACES	±	±
0 PLACES	±	±

ANGULAR TOL ± 3.0

DRAFT WHERE APPLICABLE MUST REMAIN WITHIN DIMENSIONS

REV A15

DIMENSION UNITS: MM
SCALE: NTS
DRWN BY: GMENARLY DATE: 2015/04/15
CHK'D BY: CGOH DATE: 2015/06/29
APPR BY: KHLIM DATE: 2015/06/29
DRAWING SIZE: A3
THIRD ANGLE PROJECTION

molex®

MILLIGRID
2MM PITCH, THROUGH HOLE VERTICAL SHROUDED HEADER

PRODUCT CUSTOMER DRAWING

SERIES	MATERIAL NUMBER	CUSTOMER
87831	SEE TABLE	GENERAL MARKET

DOCUMENT NUMBER	DOC TYPE	DOC PART	SHEET NUMBER
SD-87831-0001	PSD	001	5 OF 13

RELEASE STATUS	P1	RELEASE DATE	2018/08/03 00:10:23

FORMAT: Met-lega-master-tb-prod-A3
REVISION: C
DATE: 2017/02/06

8 TO 12 CIRCUITS

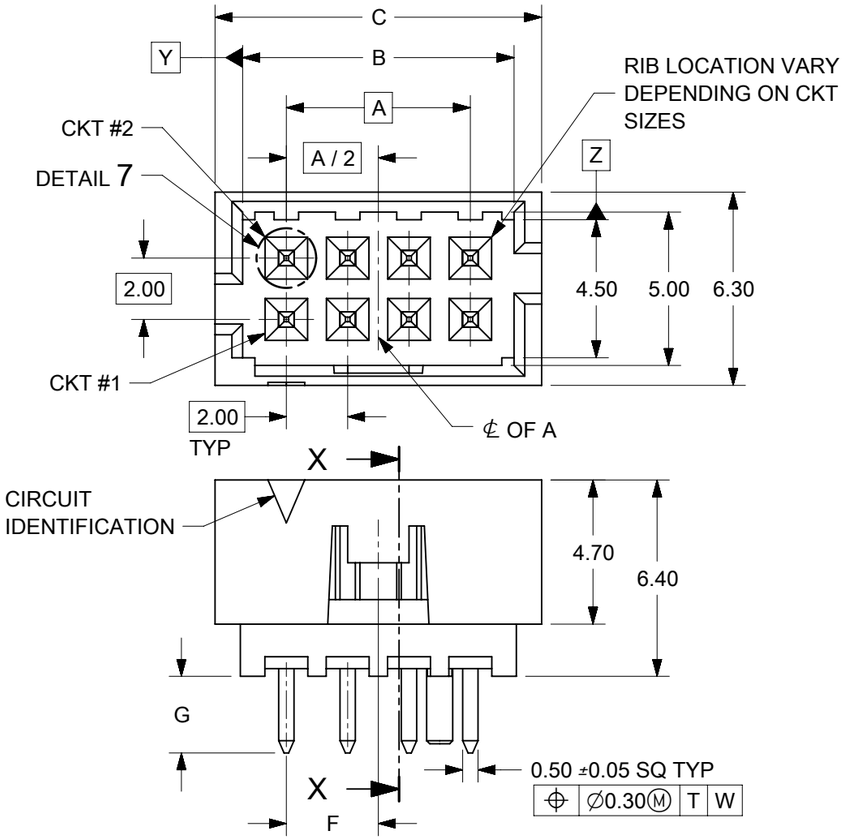

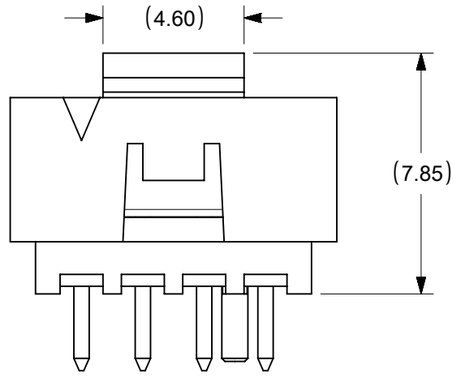

VIEW FOR HEADER WITH CAP

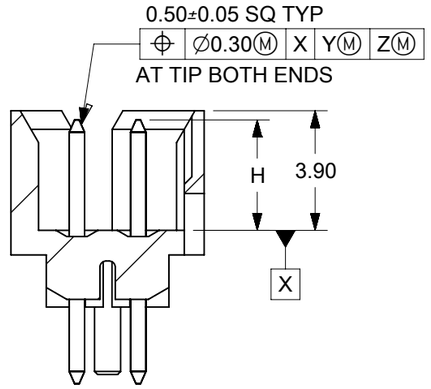

SECTION X-X

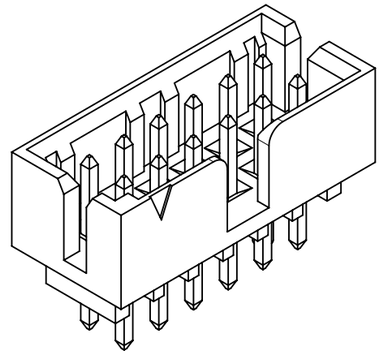

VIEW FOR HEADER WITH CENTER POLARIZATION AND DUAL SIDE SLOTS

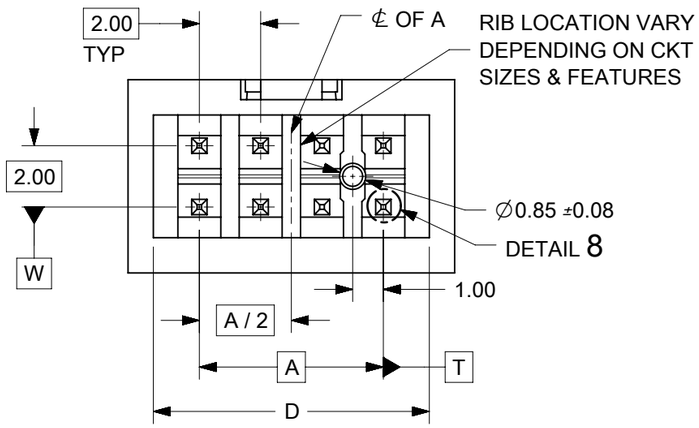

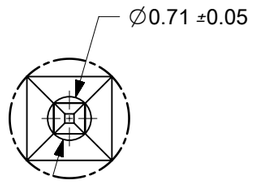

DETAIL 7

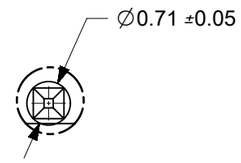

DETAIL 8

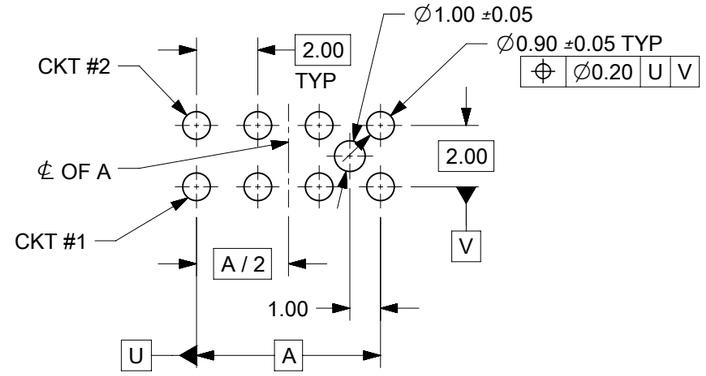

RECOMMENDED PCB LAYOUT

NOTES:
1. MATERIALS:
   HOUSING: 30% GF, NYLON, UL94V-0, COLOR: BLACK
   PIN: 0.50mm SQ PHOSPHOR BRONZE
2. FINISHES: REFER TO PLATING OPTIONS
3. PRODUCT SPECIFICATION: PS-87831-027
4. PACKAGING SPECIFICATION: SEE PACKAGING SPECS TABLE ON SHEET 1
5. MATES WITH: A. MOLEX CRIMP RECEPTACLE HOUSING: 51110 SERIES
   AND CRIMP TERMINAL: 50394 SERIES
   B. MOLEX 2mm MILLIGRID DUAL ROW IDT: 87568 SERIES
   C. MOLEX 2mm MILLIGRID DUAL ROW RECEPTACLE:
   79107 (GOLD PLATED), 78787 (TIN PLATED)

THIS DRAWING CONTAINS INFORMATION THAT IS PROPRIETARY TO MOLEX ELECTRONIC TECHNOLOGIES, LLC AND SHOULD NOT BE USED WITHOUT WRITTEN PERMISSION

ADD P/N 87831-2445		
EC NO: 601974	DRWN: SCS02	2018/07/26
CHK'D: GJEEVANSURES		2018/07/26
APPR: ISHWARG		2018/08/03

GENERAL TOLERANCES (UNLESS SPECIFIED)

	MM	INCH
4 PLACES	±	±
3 PLACES	±	±
2 PLACES	± 0.2	±
1 PLACES	±	±
0 PLACES	±	±

ANGULAR TOL ± 3.0

DRAFT WHERE APPLICABLE MUST REMAIN WITHIN DIMENSIONS

REV: A15

DIMENSION UNITS	MM
SCALE	NTS
DRWN BY	GMENARLY
DATE	2015/04/15
CHK'D BY	CGOH
DATE	2015/06/29
APPR BY	KHLIM
DATE	2015/06/29
DRAWING SIZE	A3
THIRD ANGLE PROJECTION	

molex®

MILLIGRID
2MM PITCH, THROUGH HOLE VERTICAL SHROUDED HEADER

PRODUCT CUSTOMER DRAWING

SERIES	MATERIAL NUMBER	CUSTOMER
87831	SEE TABLE	GENERAL MARKET

DOCUMENT NUMBER	DOC TYPE	DOC PART	SHEET NUMBER
SD-87831-0001	PSD	001	6 OF 13

RELEASE STATUS	P1	RELEASE DATE	2018/08/03 00:10:23

FORMAT: Met-lega-master-tb-prod-A3
REVISION: C
DATE: 2017/02/06

8 CIRCUITS

CKT SIZE	ASSY P/N WITHOUT CAP IN TUBE	ASSY P/N WITH CAP IN TUBE	ASSY P/N WITH CAP IN T&R	PLATING OPTIONS	FRICTION LOCKS		SIDE SLOTS		CENTER POLARIZATION	PEG	DIMENSION							
					DUAL	CENTER	DUAL	SINGLE			A	B	C	D	E	F	G	H
8	87831-0819	N.A	N.A	1	N.A	N.A	YES	N.A	YES	N.A	6.00	8.85	10.65	9.00	N.A	N.A	2.50	3.60±0.20
	87831-0820	N.A	N.A	2														
	87831-0821	N.A	N.A	3														
	87831-0836	N.A	N.A	4														
	87831-0828	N.A	N.A	2	N.A	N.A	YES	N.A	YES	YES						N.A	2.50	
	87831-0829	N.A	N.A	3														
	87831-0841	N.A	87831-5551	2	N.A	YES	YES	N.A	N.A	N.A						3.00	2.50	
	87831-0842	N.A	N.A	3														
	87831-5841	N.A	N.A	2	N.A	YES	YES	N.A	N.A	YES							3.50	
	87831-5441	N.A	N.A	2	N.A	YES	YES	N.A	N.A	N.A								
	87831-5442	N.A	N.A	3														
	87831-5541	N.A	N.A	2	N.A	YES	YES	N.A	N.A	N.A							2.80	
	87831-5542	N.A	N.A	3														
	87831-5741	N.A	N.A	2	N.A	YES	YES	N.A	N.A	N.A							4.70	
	87831-5742	N.A	N.A	3														
	87831-0832	N.A	N.A	2	N.A	YES	YES	N.A	N.A	YES							2.50	$3.60^{+0.15}_{-0.10}$
	87831-0843	N.A	N.A	2	N.A	YES	N.A	YES	N.A	N.A							2.50	
	87831-0844	N.A	N.A	3														
	87831-0845	N.A	N.A	2	N.A	YES	N.A	YES	N.A	YES							2.50	
	87831-0846	N.A	N.A	3														

PLATING OPTIONS:

1 - 0.05-0.13µm/2-5µin GOLD IN CONTACT AREA AND
1.88µm/75µin MIN. MATTE TIN IN SOLDER TAIL AREA OVER
1.27µm/50µin MIN. NICKEL OVERALL.
2 - 0.38µm/15µin GOLD IN CONTACT AREA AND
1.88µm/75µin MIN. MATTE TIN IN SOLDER TAIL AREA OVER
1.27µm/50µin MIN. NICKEL OVERALL.
3 - 0.76µm/30µin GOLD IN CONTACT AREA AND
1.88µm/75µin MIN. MATTE TIN IN SOLDER TAIL AREA OVER
1.27µm/50µin MIN. NICKEL OVERALL.
4 - 2.50µm/100µin MIN. MATTE TIN OVER 1.25µm/50µin MIN. NICKEL OVERALL.

THIS DRAWING CONTAINS INFORMATION THAT IS PROPRIETARY TO MOLEX ELECTRONIC TECHNOLOGIES, LLC AND SHOULD NOT BE USED WITHOUT WRITTEN PERMISSION

ADD P/N 87831-2445 2018/07/26
EC NO: 601974 DRWN: SCS02 2018/07/26
CHK'D: GJEEVANSURES 2018/08/03
APPR: ISHWARG

GENERAL TOLERANCES (UNLESS SPECIFIED)

	MM	INCH
4 PLACES	±	±
3 PLACES	±	±
2 PLACES	± 0.2	±
1 PLACES	±	±
0 PLACES	±	±

ANGULAR TOL ± 3.0

DRAFT WHERE APPLICABLE MUST REMAIN WITHIN DIMENSIONS

REV A15

DIMENSION UNITS: MM
SCALE: NTS
DRWN BY: GMENARLY DATE: 2015/04/15
CHK'D BY: CGOH DATE: 2015/06/29
APPR BY: KHLIM DATE: 2015/06/29
DRAWING SIZE: A3
THIRD ANGLE PROJECTION

molex®

MILLIGRID
2MM PITCH, THROUGH HOLE VERTICAL SHROUDED HEADER

PRODUCT CUSTOMER DRAWING

SERIES	MATERIAL NUMBER	CUSTOMER
87831	SEE TABLE	GENERAL MARKET

DOCUMENT NUMBER	DOC TYPE	DOC PART	SHEET NUMBER
SD-87831-0001	PSD	001	7 OF 13

RELEASE STATUS	P1	RELEASE DATE	2018/08/03 00:10:23

FORMAT: Met-lega-master-tb-prod-A3
REVISION: C
DATE: 2017/02/06

10 TO 12 CIRCUITS

CKT SIZE	ASSY P/N WITHOUT CAP IN TUBE	ASSY P/N WITH CAP IN TUBE	ASSY P/N WITH CAP IN T&R	PLATING OPTIONS	FRICTION LOCKS		SIDE SLOTS		CENTER POLARIZATION	PEG	DIMENSION							
					DUAL	CENTER	DUAL	SINGLE			A	B	C	D	E	F	G	H
10	87831-1019	N.A	N.A	1	N.A	N.A	YES	N.A	YES	N.A	8.00	10.85	12.65	11.00	N.A	N.A	2.50	3.60±0.20
	87831-1020	N.A	N.A	2														
	87831-1021	N.A	87831-5562	3														
	87831-1036	N.A	N.A	4														
	87831-1010	N.A	87831-5561	2	N.A	N.A	YES	N.A	YES	N.A							3.50	
	87831-1011	N.A	N.A	3														
	87831-1028	N.A	N.A	2	N.A	N.A	YES	N.A	YES	YES							2.50	
	87831-1029	N.A	87831-5557	3														
	87831-1035	N.A	N.A	3	N.A	N.A	YES	N.A	YES	YES							3.50	
	87831-1041	N.A	N.A	2	N.A	YES	YES	N.A	N.A	N.A						4.00	2.50	
	87831-1042	N.A	87831-5553	3														
	87831-1032	N.A	N.A	2	N.A	YES	YES	N.A	N.A	YES							2.50	3.60 +0.15 -0.10
	87831-1043	N.A	N.A	2	N.A	YES	N.A	YES	N.A	N.A							2.50	
	87831-1044	N.A	N.A	3														
	87831-1045	N.A	N.A	2	N.A	YES	N.A	YES	N.A	YES							2.50	
	87831-1046	N.A	N.A	3														
12	87831-1219	N.A	N.A	1	N.A	N.A	YES	N.A	YES	N.A	10.00	12.85	14.65	13.00	N.A	N.A	2.50	3.60±0.20
	87831-1220	N.A	87831-5556	2														
	87831-1221	N.A	N.A	3														
	87831-1236	N.A	N.A	4														
	87831-1228	N.A	N.A	2	N.A	N.A	YES	N.A	YES	YES							2.50	
	87831-1229	N.A	87831-5558	3														
	87831-1258	N.A	(A13) 87831-5567	2													3.50	
	87831-1241	N.A	N.A	2	N.A	YES	YES	N.A	N.A	N.A						5.00	2.50	
	87831-1242	N.A	N.A	3														
	87831-1255	87831-1256	N.A	2	N.A	YES	YES	N.A	N.A	N.A							3.50	
	87831-1232	N.A	N.A	2	N.A	YES	YES	N.A	N.A	YES							2.50	3.60 +0.15 -0.10
	87831-1243	N.A	N.A	2	N.A	YES	N.A	YES	N.A	N.A							2.50	
	87831-1244	N.A	N.A	3														
	87831-1245	N.A	N.A	2	N.A	YES	N.A	YES	N.A	YES							2.50	
	87831-1246	N.A	N.A	3														

PLATING OPTIONS:

1 - 0.05-0.13µm/2-5µin GOLD IN CONTACT AREA AND
1.88µm/75µin MIN. MATTE TIN IN SOLDER TAIL AREA OVER
1.27µm/50µin MIN. NICKEL OVERALL.
2 - 0.38µm/15µin GOLD IN CONTACT AREA AND
1.88µm/75µin MIN. MATTE TIN IN SOLDER TAIL AREA OVER
1.27µm/50µin MIN. NICKEL OVERALL.
3 - 0.76µm/30µin GOLD IN CONTACT AREA AND
1.88µm/75µin MIN. MATTE TIN IN SOLDER TAIL AREA OVER
1.27µm/50µin MIN. NICKEL OVERALL.
4 - 2.50µm/100µin MIN. MATTE TIN OVER 1.25µm/50µin MIN. NICKEL OVERALL.

THIS DRAWING CONTAINS INFORMATION THAT IS PROPRIETARY TO MOLEX ELECTRONIC TECHNOLOGIES, LLC AND SHOULD NOT BE USED WITHOUT WRITTEN PERMISSION

ADD P/N 87831-2445 2018/07/26
EC NO: 601974 2018/07/26
DRWN: SCS02 CHK'D: GJEEVANSURES
APPR: ISHWARG 2018/08/03

GENERAL TOLERANCES (UNLESS SPECIFIED)

	MM	INCH
4 PLACES	±	±
3 PLACES	±	±
2 PLACES	± 0.2	±
1 PLACES	±	±
0 PLACES	±	±

ANGULAR TOL ± 3.0

DRAFT WHERE APPLICABLE MUST REMAIN WITHIN DIMENSIONS

REV A15

DIMENSION UNITS: MM
SCALE: NTS
DRWN BY: GMENARLY DATE: 2015/04/15
CHK'D BY: CGOH DATE: 2015/06/29
APPR BY: KHLIM DATE: 2015/06/29
DRAWING SIZE: A3
THIRD ANGLE PROJECTION

molex®

MILLIGRID
2MM PITCH, THROUGH HOLE VERTICAL SHROUDED HEADER

PRODUCT CUSTOMER DRAWING

SERIES	MATERIAL NUMBER	CUSTOMER
87831	SEE TABLE	GENERAL MARKET

DOCUMENT NUMBER	DOC TYPE	DOC PART	SHEET NUMBER
SD-87831-0001	PSD	001	8 OF 13

RELEASE STATUS	P1	RELEASE DATE	2018/08/03 00:10:23

FORMAT: Met-lega-master-tb-prod-A3
REVISION: C
DATE: 2017/02/06

14 TO 50 CIRCUITS

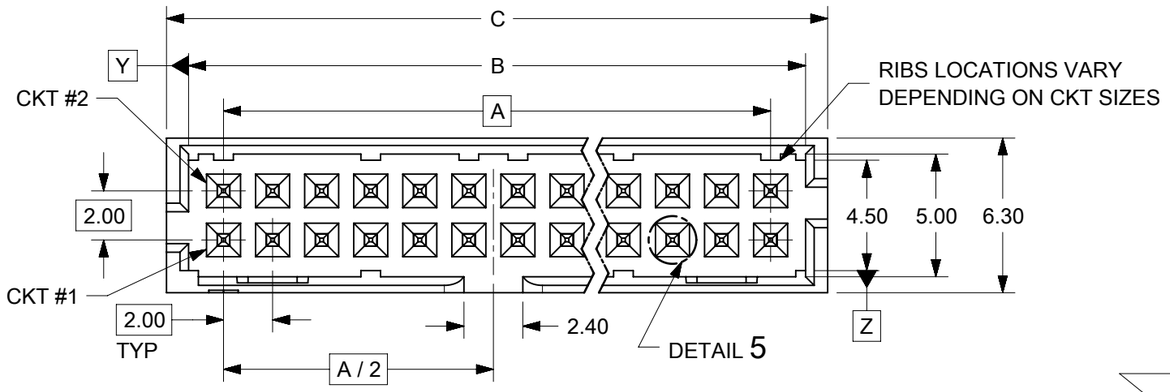

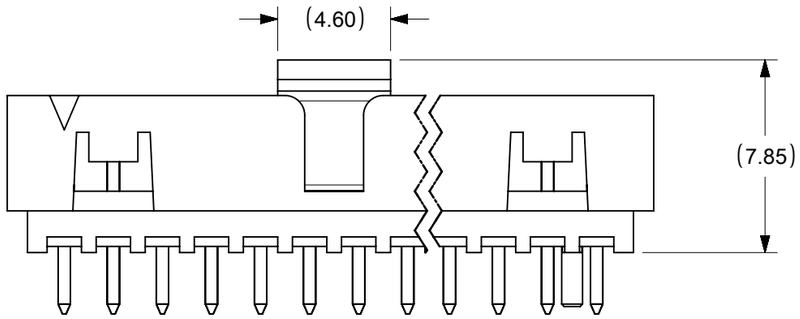

VIEW FOR HEADER WITH CAP

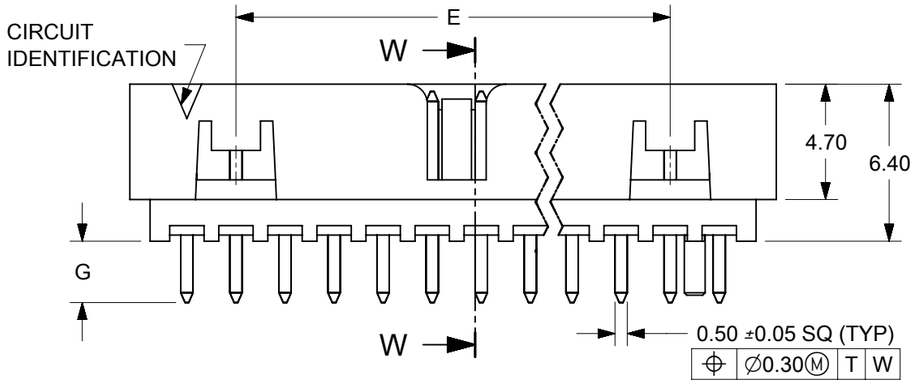

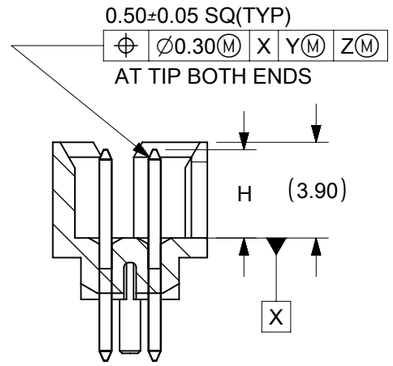

SECTION W-W

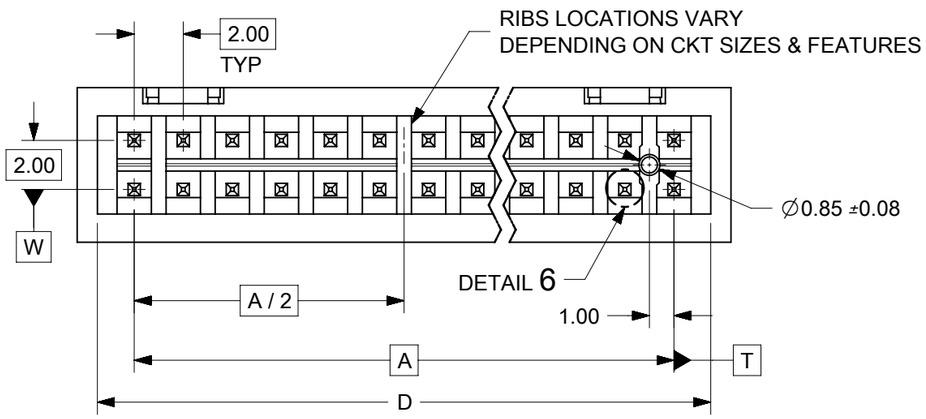

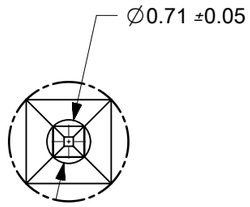

DETAIL 5

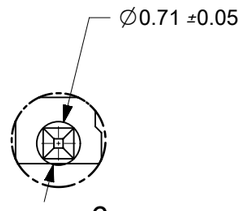

DETAIL 6

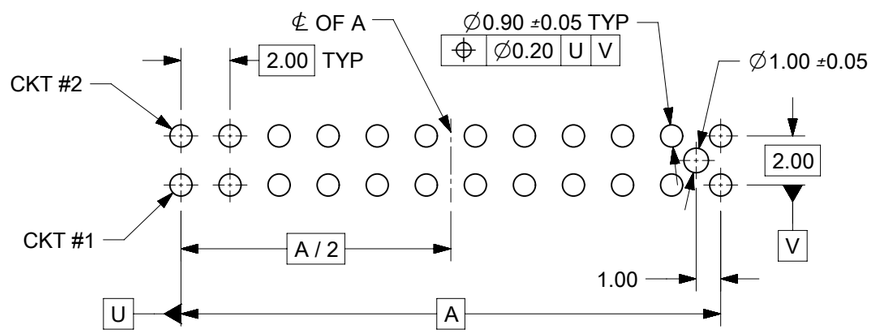

RECOMMENDED PCB LAYOUT

NOTES:
1. MATERIALS:
   HOUSING: 30% GF, NYLON, UL94V-0, COLOR: BLACK
   PIN: 0.50mm SQ PHOSPHOR BRONZE
2. FINISHES: REFER TO PLATING OPTIONS
3. PRODUCT SPECIFICATION: PS-87831-027
4. PACKAGING SPECIFICATION: SEE PACKAGING SPECS TABLE ON SHEET 1
5. MATES WITH: A. MOLEX CRIMP RECEPTACLE HOUSING: 51110 SERIES
   AND CRIMP TERMINAL: 50394 SERIES
   B. MOLEX 2mm MILLIGRID DUAL ROW IDT: 87568 SERIES
   C. MOLEX 2mm MILLIGRID DUAL ROW RECEPTACLE:
   79107 (GOLD PLATED), 78787 (TIN PLATED)

THIS DRAWING CONTAINS INFORMATION THAT IS PROPRIETARY TO MOLEX ELECTRONIC TECHNOLOGIES, LLC AND SHOULD NOT BE USED WITHOUT WRITTEN PERMISSION

ADD P/N 87831-2445	2018/07/26		
EC NO: 601974	2018/07/26		
DRWN: SCS02	2018/08/03		
CHK'D: GJEEVANSURES			
APPR: ISHWARG			
A15	REV		

GENERAL TOLERANCES (UNLESS SPECIFIED)

	MM	INCH
4 PLACES	±	±
3 PLACES	±	±
2 PLACES	± 0.2	±
1 PLACES	±	±
0 PLACES	±	±

ANGULAR TOL ± 3.0

DRAFT WHERE APPLICABLE MUST REMAIN WITHIN DIMENSIONS

DIMENSION UNITS	MM
SCALE	NTS
DRWN BY	GMENARLY
DATE	2015/04/15
CHK'D BY	CGOH
DATE	2015/06/29
APPR BY	KHLIM
DATE	2015/06/29
DRAWING SIZE	A3
THIRD ANGLE PROJECTION	

molex®

MILLIGRID
2MM PITCH, THROUGH HOLE VERTICAL SHROUDED HEADER

PRODUCT CUSTOMER DRAWING

SERIES	MATERIAL NUMBER	CUSTOMER
87831	SEE TABLE	GENERAL MARKET

DOCUMENT NUMBER	DOC TYPE	DOC PART	SHEET NUMBER
SD-87831-0001	PSD	001	9 OF 13

RELEASE STATUS	P1	RELEASE DATE	2018/08/03 00:10:23

FORMAT: Met-lega-master-lb-prod-A3
REVISION: C
DATE: 2017/02/06

14 TO 20 CIRCUITS

CKT SIZE	ASSY P/N WITHOUT CAP IN TUBE	ASSY P/N WITH CAP IN TUBE	ASSY P/N WITH CAP IN T&R	PLATING OPTIONS	FRICTION LOCKS		SIDE SLOTS		CENTER POLARIZATION	PEG	DIMENSION							
					DUAL	CENTER	DUAL	SINGLE			A	B	C	D	E	F	G	H
14	87831-1419	N.A	N.A	1	YES	N.A	YES	N.A	YES	N.A	12.00	14.85	16.65	15.00	8.00	N.A	2.50	3.60±0.20
	87831-1420	87831-1430	87831-5554	2														
	87831-1421	N.A	87831-5560	3														
	87831-1436	N.A	N.A	4														
	87831-1428	N.A	A14 87831-5564	2	YES	N.A	YES	N.A	YES	YES							2.50	
	87831-1429	N.A	87831-5563	3														
	87831-1435	N.A	N.A	3	YES	N.A	YES	N.A	YES	YES							3.50	
	87831-1410	N.A	N.A	2	YES	N.A	YES	N.A	YES	N.A							3.50	
	87831-1411	N.A	N.A	3														
16	87831-1619	N.A	N.A	1	YES	N.A	YES	N.A	YES	N.A	14.00	16.85	18.65	17.00	10.00	N.A	2.50	3.60±0.20
	87831-1620	N.A	N.A	2														
	87831-1621	N.A	N.A	3														
	87831-1636	N.A	N.A	4														
	87831-1628	N.A	N.A	2	YES	N.A	YES	N.A	YES	YES							2.50	
	87831-1629	N.A	87831-5559	3														
	87831-1635	N.A	N.A	3	YES	N.A	YES	N.A	YES	YES							3.50	
18	87831-1819	N.A	N.A	1	YES	N.A	YES	N.A	YES	N.A	16.00	18.85	20.65	19.00	12.00	N.A	2.50	3.60±0.20
	87831-1820	N.A	87831-5566	2														
	87831-1821	N.A	N.A	3														
	87831-1836	N.A	N.A	4														
	87831-1828	N.A	N.A	2	YES	N.A	YES	N.A	YES	YES							2.50	
	87831-1829	N.A	N.A	3														
20	87831-2019	N.A	N.A	1	YES	N.A	YES	N.A	YES	N.A	18.00	20.85	22.65	21.00	14.00	N.A	2.50	3.60±0.20
	87831-2020	N.A	N.A	2														
	87831-2021	N.A	N.A	3														
	87831-2036	N.A	N.A	4														
	87831-2028	N.A	N.A	2	YES	N.A	YES	N.A	YES	YES							2.50	
	87831-2029	N.A	N.A	3														
	87831-2035	N.A	N.A	3	YES	N.A	YES	N.A	YES	YES							3.50	
	87831-2010	N.A	N.A	2	YES	N.A	YES	N.A	YES	N.A							3.50	
	87831-2011	N.A	A13 87831-2041	3														

PLATING OPTIONS:

1 - 0.05-0.13µm/2-5µin GOLD IN CONTACT AREA AND 1.88µm/75µin MIN. MATTE TIN IN SOLDER TAIL AREA OVER 1.27µm/50µin MIN. NICKEL OVERALL.
2 - 0.38µm/15µin GOLD IN CONTACT AREA AND 1.88µm/75µin MIN. MATTE TIN IN SOLDER TAIL AREA OVER 1.27µm/50µin MIN. NICKEL OVERALL.
3 - 0.76µm/30µin GOLD IN CONTACT AREA AND 1.88µm/75µin MIN. MATTE TIN IN SOLDER TAIL AREA OVER 1.27µm/50µin MIN. NICKEL OVERALL.
4 - 2.50µm/100µin MIN. MATTE TIN OVER 1.25µm/50µin MIN. NICKEL OVERALL.

THIS DRAWING CONTAINS INFORMATION THAT IS PROPRIETARY TO MOLEX ELECTRONIC TECHNOLOGIES, LLC AND SHOULD NOT BE USED WITHOUT WRITTEN PERMISSION

ADD P/N 87831-2445 2018/07/26
EC NO: 601974 2018/07/26
DRWN: SCS02 CHK'D: GJEEVANSURES 2018/08/03
APPR: ISHWARG

GENERAL TOLERANCES (UNLESS SPECIFIED)

	MM	INCH
4 PLACES	±	±
3 PLACES	±	±
2 PLACES	± 0.2	±
1 PLACES	±	±
0 PLACES	±	±

ANGULAR TOL ± 3.0

DRAFT WHERE APPLICABLE MUST REMAIN WITHIN DIMENSIONS

REV A15

DIMENSION UNITS: MM
SCALE: NTS
DRWN BY: GMENARLY DATE: 2015/04/15
CHK'D BY: CGOH DATE: 2015/06/29
APPR BY: KHLIM DATE: 2015/06/29
DRAWING SIZE: A3
THIRD ANGLE PROJECTION

molex®

MILLIGRID
2MM PITCH, THROUGH HOLE VERTICAL SHROUDED HEADER

PRODUCT CUSTOMER DRAWING

SERIES	MATERIAL NUMBER	CUSTOMER
87831	SEE TABLE	GENERAL MARKET

DOCUMENT NUMBER	DOC TYPE	DOC PART	SHEET NUMBER
SD-87831-0001	PSD	001	10 OF 13

RELEASE STATUS	P1	RELEASE DATE	2018/08/03 00:10:23

FORMAT: Met-lega-master-tb-prod-A3
REVISION: C
DATE: 2017/02/06

22 TO 30 CIRCUITS

CKT SIZE	ASSY P/N WITHOUT CAP IN TUBE	ASSY P/N WITH CAP IN TUBE	ASSY P/N WITH CAP IN T&R	PLATING OPTIONS	FRICTION LOCKS		SIDE SLOTS		CENTER POLARIZATION	PEG	DIMENSION							
					DUAL	CENTER	DUAL	SINGLE			A	B	C	D	E	F	G	H
22	87831-2219	N.A	N.A	1	YES	N.A	YES	N.A	YES	N.A	20.00	22.85	24.65	23.00	16.00	N.A	2.50	3.60±0.20
	87831-2220	N.A	N.A	2														
	87831-2221	N.A	N.A	3														
	87831-2236	N.A	N.A	4														
	87831-2228	N.A	N.A	2	YES	N.A	YES	N.A	YES	YES							2.50	
	87831-2229	N.A	N.A	3														
24	87831-2419	N.A	N.A	1	YES	N.A	YES	N.A	YES	N.A	22.00	24.85	26.65	25.00	18.00	N.A	2.50	3.60±0.20
	87831-2420	N.A	N.A	2														
	87831-2421	N.A	N.A	3														
	87831-2436	N.A	N.A	4														
	87831-2428	N.A	N.A	2	YES	N.A	YES	N.A	YES	YES							2.50	
	87831-2429	N.A	N.A	3														
	87831-2435	N.A	N.A	3													3.50	
	(A15) 87831-2445	N.A	N.A	3													2.80	
	87831-2410	N.A	N.A	2	YES	N.A	YES	N.A	YES	N.A							3.50	
26	87831-2619	N.A	N.A	1	YES	N.A	YES	N.A	YES	N.A	24.00	26.85	28.65	27.00	20.00	N.A	2.50	3.60±0.20
	87831-2620	87831-2630	87831-5555	2														
	87831-2621	N.A	N.A	3														
	87831-2636	N.A	N.A	4														
	87831-2628	N.A	N.A	2	YES	N.A	YES	N.A	YES	YES							2.50	
	87831-2629	N.A	N.A	3														
	87831-2610	N.A	N.A	2	YES	N.A	YES	N.A	YES	N.A							3.50	
28	87831-2819	N.A	N.A	1	YES	N.A	YES	N.A	YES	N.A	26.00	28.85	30.65	29.00	22.00	N.A	2.50	3.60±0.20
	87831-2820	N.A	N.A	2														
	87831-2821	N.A	N.A	3														
	87831-2836	N.A	N.A	4														
	87831-2828	N.A	N.A	2	YES	N.A	YES	N.A	YES	YES							2.50	
	87831-2829	N.A	N.A	3														
30	87831-3019	N.A	N.A	1	YES	N.A	YES	N.A	YES	N.A	28.00	30.85	32.65	31.00	24.00	N.A	2.50	3.60±0.20
	87831-3020	N.A	N.A	2														
	87831-3021	N.A	N.A	3														
	87831-3036	N.A	N.A	4														
	87831-3028	N.A	N.A	2	YES	N.A	YES	N.A	YES	YES							2.50	
	87831-3029	N.A	N.A	3														
	87831-3035	N.A	N.A	3	YES	N.A	YES	N.A	YES	YES							3.50	
	87831-3010	87831-3030	87831-3050	2	YES	N.A	YES	N.A	YES	N.A							3.50	

PLATING OPTIONS:

1 - 0.05-0.13µm/2-5µin GOLD IN CONTACT AREA AND
1.88µm/75µin MIN. MATTE TIN IN SOLDER TAIL AREA OVER
1.27µm/50µin MIN. NICKEL OVERALL.

2 - 0.38µm/15µin GOLD IN CONTACT AREA AND
1.88µm/75µin MIN. MATTE TIN IN SOLDER TAIL AREA OVER
1.27µm/50µin MIN. NICKEL OVERALL.

3 - 0.76µm/30µin GOLD IN CONTACT AREA AND
1.88µm/75µin MIN. MATTE TIN IN SOLDER TAIL AREA OVER
1.27µm/50µin MIN. NICKEL OVERALL.

4 - 2.50µm/100µin MIN. MATTE TIN OVER 1.25µm/50µin MIN. NICKEL OVERALL.

THIS DRAWING CONTAINS INFORMATION THAT IS PROPRIETARY TO MOLEX ELECTRONIC TECHNOLOGIES, LLC AND SHOULD NOT BE USED WITHOUT WRITTEN PERMISSION

ADD P/N 87831-2445 2018/07/26
EC NO: 601974 2018/07/26
DRWN: SCS02 CHK'D: GJEEVANSURES 2018/08/03
APPR: ISHWARG

GENERAL TOLERANCES (UNLESS SPECIFIED)

	MM	INCH
4 PLACES	±	±
3 PLACES	±	±
2 PLACES	± 0.2	±
1 PLACES	±	±
0 PLACES	±	±

ANGULAR TOL ± 3.0

DRAFT WHERE APPLICABLE MUST REMAIN WITHIN DIMENSIONS

REV A15

DIMENSION UNITS: MM
SCALE: NTS
DRWN BY: GMENARLY DATE: 2015/04/15
CHK'D BY: CGOH DATE: 2015/06/29
APPR BY: KHLIM DATE: 2015/06/29
DRAWING SIZE: A3
THIRD ANGLE PROJECTION

molex®

MILLIGRID
2MM PITCH, THROUGH HOLE VERTICAL SHROUDED HEADER

PRODUCT CUSTOMER DRAWING

SERIES	MATERIAL NUMBER	CUSTOMER
87831	SEE TABLE	GENERAL MARKET

DOCUMENT NUMBER	DOC TYPE	DOC PART	SHEET NUMBER
SD-87831-0001	PSD	001	11 OF 13

RELEASE STATUS	P1	RELEASE DATE	2018/08/03 00:10:23

FORMAT: Met-lega-master-tb-prod-A3
REVISION: C
DATE: 2017/02/06

32 TO 40 CIRCUITS

CKT SIZE	ASSY P/N WITHOUT CAP IN TUBE	ASSY P/N WITH CAP IN TUBE	ASSY P/N WITH CAP IN T&R	PLATING OPTIONS	FRICTION LOCKS		SIDE SLOTS		CENTER POLARIZATION	PEG	DIMENSION							
					DUAL	CENTER	DUAL	SINGLE			A	B	C	D	E	F	G	H
32	87831-3219	N.A	N.A	1	YES	N.A	YES	N.A	YES	N.A	30.00	32.85	34.65	33.00	26.00	N.A	2.50	3.60±0.20
	87831-3220	N.A	N.A	2														
	87831-3221	N.A	N.A	3														
	87831-3236	N.A	N.A	4														
	87831-3228	N.A	N.A	2	YES	N.A	YES	N.A	YES	YES							2.50	
	87831-3229	N.A	N.A	3														
34	87831-3419	N.A	N.A	1	YES	N.A	YES	N.A	YES	N.A	32.00	34.85	36.65	35.00	28.00	N.A	2.50	3.60±0.20
	87831-3420	N.A	N.A	2														
	87831-3421	N.A	N.A	3														
	87831-3436	N.A	N.A	4														
	87831-3428	N.A	N.A	2	YES	N.A	YES	N.A	YES	YES							2.50	
	87831-3429	N.A	N.A	3														
	87831-3435	N.A	N.A	3	YES	N.A	YES	N.A	YES	YES							3.50	
36	87831-3619	N.A	N.A	1	YES	N.A	YES	N.A	YES	N.A	34.00	36.85	38.65	37.00	30.00	N.A	2.50	3.60±0.20
	87831-3620	N.A	87831-5564	2														
	87831-3621	N.A	N.A	3														
	87831-3636	N.A	N.A	4														
	87831-3628	N.A	N.A	2	YES	N.A	YES	N.A	YES	YES							2.50	
	87831-3629	N.A	N.A	3														
38	87831-3819	N.A	N.A	1	YES	N.A	YES	N.A	YES	N.A	36.00	38.85	40.65	39.00	32.00	N.A	2.50	3.60±0.20
	87831-3820	N.A	N.A	2														
	87831-3821	N.A	N.A	3														
	87831-3836	N.A	N.A	4														
	87831-3828	N.A	N.A	2	YES	N.A	YES	N.A	YES	YES							2.50	
	87831-3829	N.A	N.A	3														
40	87831-4019	N.A	N.A	1	YES	N.A	YES	N.A	YES	N.A	38.00	40.85	42.65	41.00	34.00	N.A	2.50	3.60±0.20
	87831-4020	N.A	N.A	2														
	87831-4021	N.A	N.A	3														
	87831-4036	N.A	N.A	4														
	87831-4028	N.A	N.A	2	YES	N.A	YES	N.A	YES	YES							2.50	
	87831-4029	N.A	N.A	3														
	87831-4010	N.A	N.A	2	YES	N.A	YES	N.A	YES	N.A							3.50	

PLATING OPTIONS:

1 - 0.05-0.13µm/2-5µin GOLD IN CONTACT AREA AND 1.88µm/75µin MIN. MATTE TIN IN SOLDER TAIL AREA OVER 1.27µm/50µin MIN. NICKEL OVERALL.
2 - 0.38µm/15µin GOLD IN CONTACT AREA AND 1.88µm/75µin MIN. MATTE TIN IN SOLDER TAIL AREA OVER 1.27µm/50µin MIN. NICKEL OVERALL.
3 - 0.76µm/30µin GOLD IN CONTACT AREA AND 1.88µm/75µin MIN. MATTE TIN IN SOLDER TAIL AREA OVER 1.27µm/50µin MIN. NICKEL OVERALL.
4 - 2.50µm/100µin MIN. MATTE TIN OVER 1.25µm/50µin MIN. NICKEL OVERALL.

THIS DRAWING CONTAINS INFORMATION THAT IS PROPRIETARY TO MOLEX ELECTRONIC TECHNOLOGIES, LLC AND SHOULD NOT BE USED WITHOUT WRITTEN PERMISSION

ADD P/N 87831-2445 2018/07/26
EC NO: 601974 2018/07/26
DRWN: SCS02 2018/08/03
CHK'D: GJEEVANSURES
APPR: ISHWARG

GENERAL TOLERANCES (UNLESS SPECIFIED)

	MM	INCH
4 PLACES	±	±
3 PLACES	±	±
2 PLACES	± 0.2	±
1 PLACES	±	±
0 PLACES	±	±

ANGULAR TOL ± 3.0

DRAFT WHERE APPLICABLE MUST REMAIN WITHIN DIMENSIONS

REV A15

DIMENSION UNITS: MM
SCALE: NTS
DRWN BY: GMENARLY DATE: 2015/04/15
CHK'D BY: CGOH DATE: 2015/06/29
APPR BY: KHLIM DATE: 2015/06/29
DRAWING SIZE: A3
THIRD ANGLE PROJECTION

molex®

MILLIGRID
2MM PITCH, THROUGH HOLE VERTICAL SHROUDED HEADER

PRODUCT CUSTOMER DRAWING

SERIES	MATERIAL NUMBER	CUSTOMER
87831	SEE TABLE	GENERAL MARKET

DOCUMENT NUMBER	DOC TYPE	DOC PART	SHEET NUMBER
SD-87831-0001	PSD	001	12 OF 13

RELEASE STATUS | P1 | RELEASE DATE | 2018/08/03 00:10:23

FORMAT: Met-lega-master-tb-prod-A3
REVISION: C
DATE: 2017/02/06

42 TO 50 CIRCUITS

CKT SIZE	ASSY P/N WITHOUT CAP IN TUBE	ASSY P/N WITH CAP IN TUBE	ASSY P/N WITH CAP IN T&R	PLATING OPTIONS	FRICTION LOCKS		SIDE SLOTS		CENTER POLARIZATION	PEG	DIMENSION							
					DUAL	CENTER	DUAL	SINGLE			A	B	C	D	E	F	G	H
42	87831-4219	N.A	N.A	1	YES	N.A	YES	N.A	YES	N.A	40.00	42.85	44.65	43.00	36.00	N.A	2.50	3.60±0.20
	87831-4220	N.A	N.A	2														
	87831-4221	N.A	N.A	3														
	87831-4236	N.A	N.A	4														
	87831-4228	N.A	N.A	2	YES	N.A	YES	N.A	YES	YES							2.50	
	87831-4229	N.A	N.A	3														
44	87831-4419	N.A	N.A	1	YES	N.A	YES	N.A	YES	N.A	42.00	44.85	46.65	45.00	38.00	N.A	2.50	3.60±0.20
	87831-4420	N.A	N.A	2														
	87831-4421	N.A	N.A	3														
	87831-4436	N.A	N.A	4														
	87831-4428	N.A	N.A	2	YES	N.A	YES	N.A	YES	YES							2.50	
	87831-4429	N.A	N.A	3														
	87831-4435	N.A	N.A	3	YES	N.A	YES	N.A	YES	YES							3.50	
46	87831-4619	N.A	N.A	1	YES	N.A	YES	N.A	YES	N.A	44.00	46.85	48.65	47.00	40.00	N.A	2.50	3.60±0.20
	87831-4620	N.A	N.A	2														
	87831-4621	N.A	N.A	3														
	87831-4636	N.A	N.A	4														
	87831-4628	N.A	N.A	2	YES	N.A	YES	N.A	YES	YES							2.50	
	87831-4629	N.A	N.A	3														
48	87831-4819	N.A	N.A	1	YES	N.A	YES	N.A	YES	N.A	46.00	48.85	50.65	49.00	42.00	N.A	2.50	3.60±0.20
	87831-4820	N.A	N.A	2														
	87831-4821	N.A	N.A	3														
	87831-4836	N.A	N.A	4														
	87831-4828	N.A	N.A	2	YES	N.A	YES	N.A	YES	YES							2.50	
	87831-4829	N.A	N.A	3														
50	87831-5019	N.A	N.A	1	YES	N.A	YES	N.A	YES	N.A	48.00	50.85	52.65	51.00	44.00	N.A	2.50	3.60±0.20
	87831-5020	N.A	N.A	2														
	87831-5021	N.A	N.A	3														
	87831-5036	N.A	N.A	4														
	87831-5028	N.A	N.A	2	YES	N.A	YES	N.A	YES	YES							2.50	
	87831-5029	N.A	N.A	3														
	87831-5035	N.A	N.A	3	YES	N.A	YES	N.A	YES	YES							3.50	

PLATING OPTIONS:

1 - 0.05-0.13µm/2-5µin GOLD IN CONTACT AREA AND 1.88µm/75µin MIN. MATTE TIN IN SOLDER TAIL AREA OVER 1.27µm/50µin MIN. NICKEL OVERALL.
2 - 0.38µm/15µin GOLD IN CONTACT AREA AND 1.88µm/75µin MIN. MATTE TIN IN SOLDER TAIL AREA OVER 1.27µm/50µin MIN. NICKEL OVERALL.
3 - 0.76µm/30µin GOLD IN CONTACT AREA AND 1.88µm/75µin MIN. MATTE TIN IN SOLDER TAIL AREA OVER 1.27µm/50µin MIN. NICKEL OVERALL.
4 - 2.50µm/100µin MIN. MATTE TIN OVER 1.25µm/50µin MIN. NICKEL OVERALL.

THIS DRAWING CONTAINS INFORMATION THAT IS PROPRIETARY TO MOLEX ELECTRONIC TECHNOLOGIES, LLC AND SHOULD NOT BE USED WITHOUT WRITTEN PERMISSION

ADD P/N 87831-2445 2018/07/26
EC NO: 601974 2018/07/26
DRWN: SCS02 CHK'D: GJEEVANSURES 2018/08/03
APPR: ISHWARG

GENERAL TOLERANCES (UNLESS SPECIFIED)

	MM	INCH
4 PLACES	±	±
3 PLACES	±	±
2 PLACES	± 0.2	±
1 PLACES	±	±
0 PLACES	±	±

ANGULAR TOL ± 3.0

DRAFT WHERE APPLICABLE MUST REMAIN WITHIN DIMENSIONS

REV A15

DIMENSION UNITS: MM
SCALE: NTS
DRWN BY: GMENARLY DATE: 2015/04/15
CHK'D BY: CGOH DATE: 2015/06/29
APPR BY: KHLIM DATE: 2015/06/29
DRAWING SIZE: A3
THIRD ANGLE PROJECTION

molex®

MILLIGRID
2MM PITCH, THROUGH HOLE VERTICAL SHROUDED HEADER

PRODUCT CUSTOMER DRAWING

SERIES	MATERIAL NUMBER	CUSTOMER
87831	SEE TABLE	GENERAL MARKET

DOCUMENT NUMBER	DOC TYPE	DOC PART	SHEET NUMBER
SD-87831-0001	PSD	001	13 OF 13

RELEASE STATUS	P1	RELEASE DATE	2018/08/03 00:10:23

FORMAT: Met-lega-master-tb-prod-A3
REVISION: C
DATE: 2017/02/06

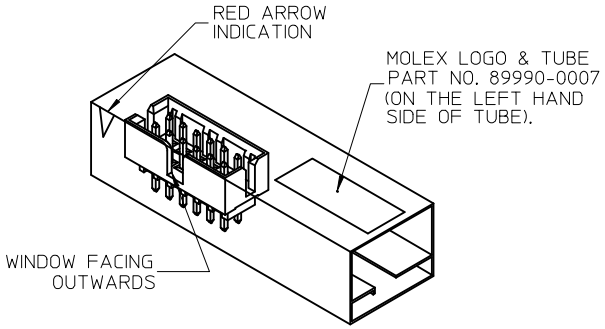

REF : ORIENTATION OF PART IN TUBE

(FOR THE REFERENCE OF PART/TUBE ASSEMBLY)

P/N IN TUBE	CKT SIZE	VOID PIN LOCATION	DIMENSION A	B	C	D	E
87831-06**	6	---	8.65	4.00	7.00	6.85	———
87831-08**	8	---	10.65	6.00	9.00	8.85	———
87831-10**	10	---	12.65	8.00	11.00	10.85	———
87831-12**	12	---	14.65	10.00	13.00	12.85	———
87831-14**	14	---	16.65	12.00	15.00	14.85	8.00
87831-16**	16	---	18.65	14.00	17.00	16.85	10.00
87831-18**	18	---	20.65	16.00	19.00	18.85	12.00
87831-20**	20	---	22.65	18.00	21.00	20.85	14.00
87831-22**	22	---	24.65	20.00	23.00	22.85	16.00
87831-24**	24	---	26.65	22.00	25.00	24.85	18.00
87831-26**	26	---	28.65	24.00	27.00	26.85	20.00
87831-28**	28	---	30.65	26.00	29.00	28.85	22.00
87831-30**	30	---	32.65	28.00	31.00	30.85	24.00
87831-32**	32	---	34.65	30.00	33.00	32.85	26.00
87831-34**	34	---	36.65	32.00	35.00	34.85	28.00
87831-36**	36	---	38.65	34.00	37.00	36.85	30.00
87831-38**	38	---	40.65	36.00	39.00	38.85	32.00
87831-40**	40	---	42.65	38.00	41.00	40.85	34.00
87831-42**	42	---	44.65	40.00	43.00	42.85	36.00
87831-44**	44	---	46.65	42.00	45.00	44.85	38.00
87831-46**	46	---	48.65	44.00	47.00	46.85	40.00
87831-48**	48	---	50.65	46.00	49.00	48.85	42.00
87831-50**	50	---	52.65	48.00	51.00	50.85	44.00
87831-5128	24	12	26.65	22.00	25.00	24.85	18.00

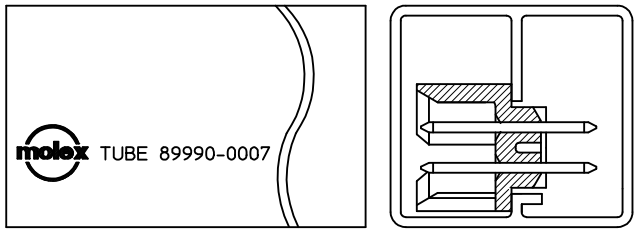

ORIENTATION OF PART IN TUBE

PART NUMBER LEGEND :

87831 - * * * *

PLATING OPTIONS

28 - 0.38um/15uin GOLD IN CONTACT AREA AND 1.88um/75uin MIN. TIN IN SOLDER TAIL AREA OVER 1.27um/50uin MIN. NICKEL OVERALL.

29 - 0.76um/30uin GOLD IN CONTACT AREA AND 1.88um/75uin MIN. TIN IN SOLDER TAIL AREA OVER 1.27um/50uin MIN. NICKEL OVERALL.

PDR No.: S-000981-00-00
EC NO: S2005-0998 2005/06/23
DRWN:YLQIAO 2005/06/23
CHKD:PTLIM 2005/06/23
APPR:SKTOH 2005/06/23
DESCRIPTION
A4
REV

QUALITY SYMBOLS
▼=0
Ⓒ=0

GENERAL TOLERANCES (UNLESS SPECIFIED)

	mm	INCH
4 PLACES	± ---	± ---
3 PLACES	± ---	± ---
2 PLACES	± 0.2	± ---
1 PLACE	± ---	± ---
ANGULAR ± 3 °		

DRAFT WHERE APPLICABLE MUST REMAIN WITHIN DIMENSIONS

DIMENSION STYLE: MM ONLY
SCALE: NTS
DESIGN UNITS: METRIC
THIRD ANGLE PROJECTION

DRAWN BY: ATSEE DATE: 2003/10/08
CHECKED BY: KCLING DATE: 2003/11/07
APPROVED BY: SKTOH DATE: 2003/11/07

TITLE: SALES DRAWING MGRID, SHROUDED HEADER VERTICAL, W/PEG

molex MOLEX INCORPORATED

MATERIAL NO.: SEE TABLE
DOCUMENT NO.: SD-87831-020
SHEET NO.: 2 OF 2
SIZE: A3

THIS DRAWING CONTAINS INFORMATION THAT IS PROPRIETARY TO MOLEX INCORPORATED AND SHOULD NOT BE USED WITHOUT WRITTEN PERMISSION