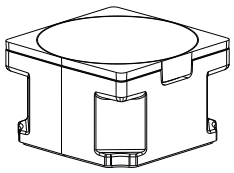

Isometric view
Scale: 1:1

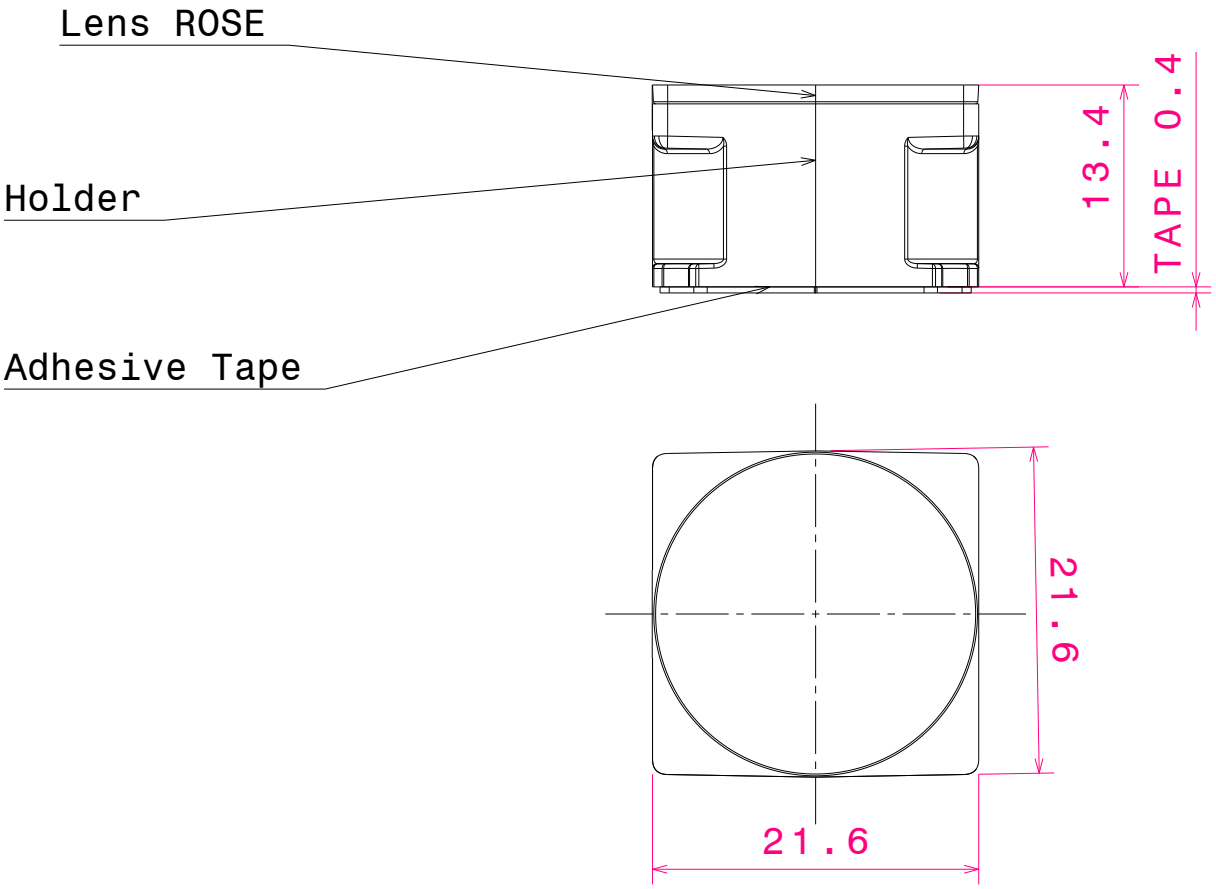

MATERIALS
LENS: PC
HOLDER: PC
Tape: PU foam with PSA adhesive

This drawing is our property.
It can't be reproduced
or communicated without
our written agreement.

LEDIL Lentilled

DRAWN BY p	DATE 05.11.2008	DRAWING TITLE Datasheet CRS assy			
CHECKED BY H	DATE 10.10.2006	SIZE A4	DRAWING NUMBER		REV 1
DESIGNED BY HH	DATE 10.10.2006	SCALE 2:1	WEIGHT(g) -		SHEET 1/1

Mouser Electronics

Authorized Distributor

Click to View Pricing, Inventory, Delivery & Lifecycle Information:

Ledil:
FA10328_CRS-SS