THIS DRAWING IS UNPUBLISHED. RELEASED FOR PUBLICATION -,- .
© COPYRIGHT - By - ALL RIGHTS RESERVED.

LOC	DIST
J	—

REVISIONS 変更

P	LTR	DESCRIPTION	DATE	DWN	APVD
	B2	REVISED PER ECO-11-005140	28MAR11	RK	HMR

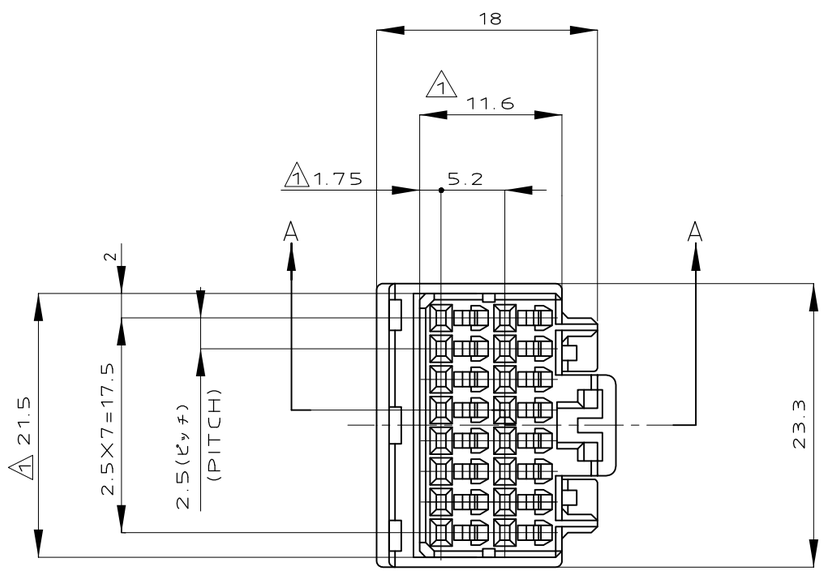

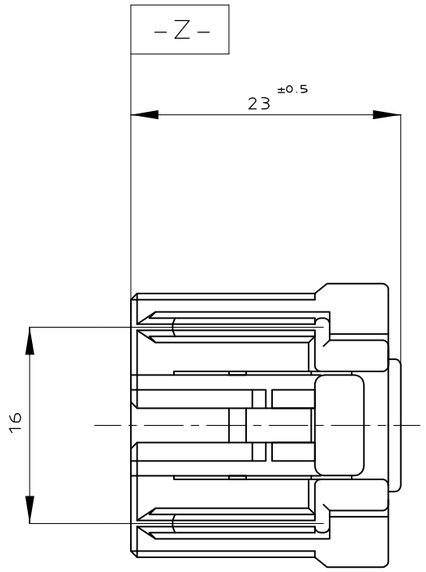

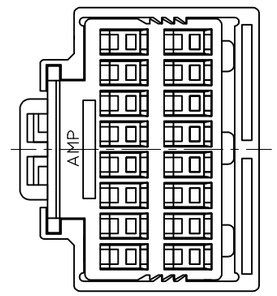

△5

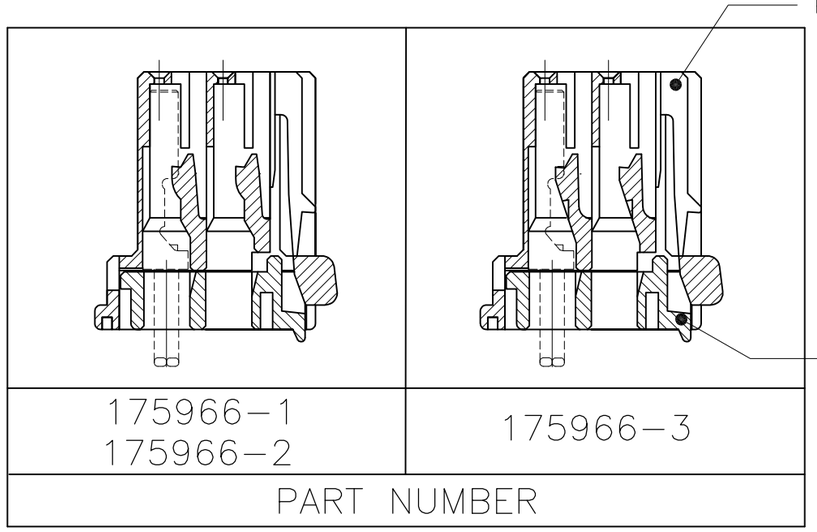

A-A

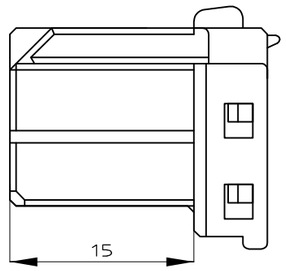

△1 MUST BE KEPT BETWEEN -Z- AND 2mm
2 THE MATING CAP HSG. PART NUMBER;175615,175976
3 APPLED CONTACT PART NUMBER;173681
4 APPLICABLE PRODUCT SPEC NO.;108-5281
△5 THIS PLUG HOUSING HAVE TWO KINDS OF LANCE TYPE.

△1 -Z- 面より2mmの範囲で測定。
2 かん合相手ハウジング型番;175615,175976
3 内装するリセプタクルコンタクト型番;173681
4 適用製品規格番号;108-5281
△5 本プラグハウジングは2タイプのランス形状がある

COLOR	PART NUMBER
BLACK	175966-3
BLACK	175966-2
NATURAL	175966-1

THIS DRAWING IS A CONTROLLED DOCUMENT.

DIMENSIONS: 単位: 耗 mm

TOLERANCES UNLESS OTHERWISE SPECIFIED: 一般公差
0 PLC ±-
1 PLC ±-
2 PLC ±-
3 PLC ±-
4 PLC ±-
ANGLES ±-

TOLERANCE UNLESS OTHERWISE SPECIFIED: 一般公差
0<x≦10 : ±0.2
10<x≦30 : ±0.25
30<x≦100 : ±0.3
ANGLE ; 角度 ±3°

MATERIAL 材料: PBT

FINISH 仕上: COLOR
HOUSING; SEE TABLE
PLATE; NATURAL

DWN K. SUZUKI 24OCT89
CHK Y. MATSUSAKA 24DEC89
APVD M. NOGUCHI 24DEC89
PRODUCT SPEC 製品規格 108-5281
APPLICATION SPEC 取付適用規格 —
WEIGHT 4.0 g

TE Connectivity

NAME 名称: 040 SERIES MULTILOCK I/O CONNECTOR MK-II 16POSITION PLUG HOUSING ASSEMBLY

SIZE	CAGE CODE	DRAWING NO 番号	RESTRICTED TO
A3	00779	C-175966	—

CUSTOMER DRAWING

SCALE 尺度 2:1 | SHEET 1 OF 1 | REV B2

Mouser Electronics

Authorized Distributor

Click to View Pricing, Inventory, Delivery & Lifecycle Information:

TE Connectivity:

175966-2